BRYNWOOD STORM DRAIN IMPROVEMENTS

CARROLL COUNTY, MARYLAND - DEPARTMENT OF LAND AND RESOURCE MANAGEMENT, BUREAU OF RESOURCE MANAGEMENT

FINAL DESIGN

TAX MAP: 0073 GRID: 0004 PARCELS: 0575, 0576
5TH ELECTION DISTRICT CARROLL COUNTY, MARYLAND

CARROLL COUNTY GENERAL NOTES:

1. EXISTING ZONING: R-20,000
2. TOTAL AREA OF SITE: 0.94 AC
3. TOTAL DISTURBED AREA: 0.94 AC
4. THE PROPERTY SHOWN HEREON IS OWNED BY MULTIPLE LAND OWNERS (SEE BREAKDOWN RIGHT).
5. TAX MAP: 0073, GRID: 0004, PARCEL: 0575, 0576
6. TOPOGRAPHIC DATA SHOWN WAS SURVEYED BY HANOVER LAND SERVICES, INC. IN APRIL-MAY 2020 AND IS SUPPLEMENTED WITH CARROLL COUNTY GIS DATA.
7. THE HORIZONTAL CONTROL SHOWN HEREON IS BASED ON THE "MARYLAND COORDINATE SYSTEM" (NAD-83). THE VERTICAL CONTROL IS BASED ON "THE NORTH AMERICAN VERTICAL DATUM OF 1988" (NAVD-88).
   THE FOLLOWING CONTROL STATIONS WERE USED:

STATION	NORTHING	EASTING	ELEVATION	DESCRIPTION
DALE DRIVE	635933.67	1322957.81	603.71	RAILROAD SPIKE LOCATED ON DALE DRIVE
DALE DRIVE AZI	636485.75	1322719.76	600.06	RAILROAD SPIKE LOCATED ON DALE DRIVE

8. LOCATION OF THE NEAREST WATER SUPPLY AVAILABLE FOR FIRE PROTECTION: FIRE HYDRANTS ON COURTLAND DRIVE AND MIRIAM DRIVE.
9. THIS CONTRACT WILL BE CONSTRUCTED UNDER THE PROVISIONS OF THE MD DEPT. OF TRANSPORTATION STATE HIGHWAY ADMINISTRATION (SHA) "STANDARD SPECIFICATIONS FOR CONSTRUCTION AND MATERIALS," DATED JULY 2022, AND ALL SUBSEQUENT ADDENDA (THE MD SHA STD'S AND SPECS).THE CARROLL COUNTY "DESIGN MANUAL FOR ROADS AND STORM DRAINS" DATED APRIL 14, 1994, AND ALL SUBSEQUENT ADDENDA, SHALL BE USED ONLY FOR ITEMS NOT IN THE MD SHA STD'S AND SPECS OR AS STATED IN THE SPECIAL PROVISIONS.
10. REFERENCES MADE TO STANDARDS ARE TAKEN FROM THE MD SHA "BOOK OF STANDARDS - HIGHWAY AND INCIDENTAL STRUCTURES" AND FROM THE CARROLL COUNTY "DESIGN MANUAL FOR ROADS AND STORM DRAINS" DATED APRIL 14, 1994, AND ALL SUBSEQUENT ADDENDA. IT WILL BE THE CONTRACTOR'S RESPONSIBILITY THAT THE STANDARD DRAWINGS IN HIS POSSESSION ARE THE LATEST REVISED STANDARDS UP TO AND INCLUDING THE DATE OF THE ADVERTISEMENT OF THIS CONTRACT.
11. THE LOCATION OF EXISTING UTILITIES SHOWN HEREON ARE APPROXIMATE ONLY. CONTRACTOR SHALL VERIFY THE EXISTENCE, LOCATION, AND DEPTH OF ANY EXISTING UTILITIES AND SHALL NOTIFY THE COUNTY AND ENGINEER OF ANY DISCREPANCIES PRIOR TO ORDERING STRUCTURES OR BEGINNING WORK.
12. THE CONTRACTOR SHALL NOTIFY "MISS UTILITY" AT 1-800-257-7777 THREE (3) WORKING DAYS PRIOR TO BEGINNING ANY WORK IN THE VICINITY OF EXISTING UTILITIES.
13. THE CONTRACTOR SHALL NOTIFY THE FOLLOWING UTILITIES OR AGENCIES AT LEAST THREE (3) WORKING DAYS BEFORE STARTING WORK AS SHOWN ON THESE DRAWINGS:
    BALTIMORE GAS & ELECTRIC..410-293-3147
    VERIZON..410-393-5793
    CARROLL COUNTY BUREAU OF UTILITIES...410-386-2164
14. ALL UTILITIES SHALL BE CLEARED BY A MINIMUM OF 1'-0" UNLESS OTHERWISE APPROVED BY THE UTILITY OWNER. EXISTING UTILITIES FOUND TO BE IN CONFLICT WILL BE RELOCATED AT THE DIRECTION OF THE COUNTY.
15. CONTRACTOR SHALL NOT INTERRUPT EXISTING UTILITY SERVICES WITHOUT WRITTEN PERMISSION FROM THE OWNER OF THE UTILITY.
16. ALL EXISTING STRUCTURES, ROADS, CURBS, INLETS, MANHOLES, PIPES, UTILITIES, AND OTHER FEATURES THAT ARE TO REMAIN IN PLACE SHALL BE PROTECTED FROM DAMAGE THROUGHOUT THE DURATION OF THE CONTRACT. ANY DAMAGE TO EXISTING STRUCTURES AND/OR FEATURES SHALL BE REPAIRED AT THE CONTRACTOR'S EXPENSE IN A MANNER APPROVED BY THE COUNTY.
17. THE CONTRACTOR SHALL USE CAUTION NOT TO DISTURB THE EXISTING VEGETATION OUTSIDE THE LIMITS OF CONSTRUCTION. SOIL STABILIZATION AND SEDIMENT CONTROL WILL CONFORM TO SOIL CONSERVATION SERVICE, "2011 MARYLAND STANDARDS AND SPECIFICATIONS FOR SOIL EROSION AND SEDIMENT CONTROL" PUBLISHED JOINTLY BY WATER MANAGEMENT ADMINISTRATION, SOIL CONSERVATION SERVICE, AND STATE SOIL CONSERVATION COMMITTEE.
18. CLEARING SHALL BE LIMITED TO THE "LIMITS OF DISTURBANCE" AS SHOWN ON THE PLANS. GRADING SHALL BE DONE IN SUCH A MANNER AS TO PROVIDE POSITIVE DRAINAGE. CONTRACTOR TO SEED AND MULCH ALL DISTURBED AREAS EXCEPT WHERE OTHERWISE DIRECTED.
19. ALL CUT/FILL QUANTITIES AS SHOWN HEREON ARE FOR INFORMATIONAL PURPOSES ONLY AS REQUIRED BY THE SEDIMENT CONTROL AUTHORITY HAVING JURISDICTION. THE CONTRACTOR SHALL VERIFY SUCH CALCULATIONS TO HIS OWN SATISFACTION FOR CONTRACT BID PURPOSES.
20. UNSUITABLE MATERIAL BELOW THE SPECIFIED SECTION SHALL BE REMOVED AND REPLACED AS CLASS 1-A EXCAVATION PER MD DOT STANDARD SECTION 201.03.09. THE CONTRACTOR SHALL NOTE THAT ROCK WAS ENCOUNTERED AT DEPTHS OF 4' TO 6.5' DURING DESIGN PHASE UTILITY TEST HOLE OPERATIONS. IF ROCK IS ENCOUNTERED DURING STORM DRAIN PIPE INSTALLATION, ADDITIONAL UNDERCUTTING IS REQUIRED AS PER MD DOT STANDARD SECTION 303.03.01 TO PROVIDE A SUITABLE BED FOR THE PIPE. ADDITIONAL UNDERCUTTING OF UNSUITABLE MATERIAL WILL BE MEASURED AND PAID FOR AS CLASS 1-A EXCAVATION.
21. IN CONSTRUCTION, ALL EXCESS SALVAGED MATERIALS INCLUDING EXCESS ROCK AND SOIL SHALL BECOME PROPERTY OF THE CONTRACTOR, AND DISPOSAL OF ANY SUCH MATERIALS WILL BE THE RESPONSIBILITY OF THE CONTRACTOR. ALL CONSTRUCTION SPOILS MUST BE HAULED OFF SITE BY THE CONTRACTOR.
22. THE CONTRACTOR SHALL NOTE THAT IN CASE OF A DISCREPANCY BETWEEN THE SCALED AND FIGURED DIMENSIONS SHOWN ON THESE PLANS, THE FIGURED DIMENSIONS SHALL GOVERN.
23. IT SHALL BE THE CONTRACTOR'S RESPONSIBILITY TO VERIFY DIMENSIONS AND ELEVATIONS AFFECTING ALL WORK IN THE FIELD. NO SEPARATE OR ADDITIONAL COMPENSATION WILL BE ALLOWED FOR THIS WORK.
24. CONTRACTOR SHALL BE RESPONSIBLE FOR NOTIFYING THE COUNTY IN THE EVENT OF ANY DISCREPANCIES IN THE PLANS OR IN THE RELATIONSHIPS OF FINISHED GRADES TO EXISTING GRADES PRIOR TO BEGINNING WORK.
25. IT SHALL BE DISTINCTLY UNDERSTOOD THAT FAILURE TO MENTION SPECIFICALLY ANY WORK WHICH WOULD NATURALLY BE REQUIRED TO COMPLETE THE PROJECT SHALL NOT RELIEVE THE CONTRACTOR OF HIS RESPONSIBILITY TO PERFORM SUCH WORK.
26. THE CONTRACTOR IS RESPONSIBLE TO OBTAIN A GEOTECHNICAL ENGINEER TO CERTIFY CONCRETE TESTING.
27. THE CONTRACTOR SHALL BE RESPONSIBLE FOR MAINTENANCE OF ALL TRAFFIC ON ANY EXISTING ROADS.
28. ALL SAFETY MEASURES TO BE IMPLEMENTED DURING THE CONSTRUCTION OF THIS PROJECT ARE THE RESPONSIBILITY OF THE CONTRACTOR.
29. THIS PROJECT SHALL BE BID ON AN ITEMIZED BASIS.
30. FINAL PAYMENT TO THE CONTRACTOR WILL NOT BE MADE UNTIL THE INSPECTION CHART IS COMPLETE AND THE AS-BUILTS ARE SUBMITTED AND ACCEPTED BY CARROLL COUNTY BUREAU OF RESOURCE MANAGEMENT.
31. IN ACCORDANCE WITH SECTIONS 151.095 & 151.096 OF THE CARROLL COUNTY CODE OF PUBLIC LOCAL LAWS AND ORDINANCES, AS PART OF THE DESIGN CONTRACT, THE DESIGN ENGINEER HAS BEEN HIRED TO PREPARE AND CERTIFY THE AS-BUILT DRAWINGS. THE CONTRACTOR SHALL PROVIDE THE DESIGN ENGINEER WITH A MARKUP OF PLANS DOCUMENTING ALL ITEMS/IMPROVEMENTS ARE PER CONSTRUCTION DOCUMENTS, AND ANY CHANGES DURING CONSTRUCTION. UNLESS PRIOR WRITTEN PERMISSION IS OBTAINED, THE CONTRACTOR MUST HIRE THE DESIGN ENGINEER TO PERFORM CONSTRUCTION STAKE-OUT.
32. THE CONTRACTOR IS SOLELY RESPONSIBLE FOR CONSTRUCTION MEANS, METHODS, TECHNIQUES, SEQUENCES, PROCEDURES, AND SAFETY PRECAUTIONS AND PROGRAMS.
33. CONTRACTOR MUST BE PRE-QUALIFIED WITH DEPARTMENT OF PUBLIC WORKS TO CONSTRUCT PUBLIC WATER AND SEWER UTILITY WORK.

SITE DEVELOPMENT PLAN INSPECTION SEQUENCE NOTES:

1. CONTRACTOR SHALL NOTIFY THE CARROLL COUNTY BUREAU OF ENGINEERING, CONSTRUCTION INSPECTION AT 410-386-2157 OPTION 1, AT LEAST ONE DAY PRIOR TO BEGINNING ANY WORK.
2. SITE COMPLIANCE INSPECTIONS ARE REQUIRED DURING CONSTRUCTION. SEE SEQUENCE OF CONSTRUCTION INSPECTION CHARTS. THE CONTRACTOR SHALL NOT PROCEED TO THE NEXT PHASE OF CONSTRUCTION UNTIL GIVEN APPROVAL OF PRIOR PHASES.
3. CONTRACTOR SHALL NOTIFY CARROLL COUNTY BUREAU OF RESOURCE MANAGEMENT, ENVIRONMENTAL INSPECTION SERVICES DIVISION AT 410-386-2210 PRIOR TO BEGINNING ANY WORK.

INDEX OF SHEETS

SHEET NO.	DRAWING NO.	DESCRIPTION
01	GN-01	COVER SHEET
02	UT-01	EXISTING UTILITY PLAN
03	UT-02	EXISTING UTILITY PLAN
04	DD-01	DRAINAGE PLAN
05	DD-02	DRAINAGE PLAN
06	PR-01	DRAINAGE PROFILES
07	PR-02	DRAINAGE PROFILES
08	PR-03	DRAINAGE PROFILES
09	PR-04	DRAINAGE PROFILES
10	DE-01	DRAINAGE DETAILS
11	DE-02	DRAINAGE DETAILS
12	DA-01	DRAINAGE AREA MAP
13	ES-01	EROSION & SEDIMENT CONTROL PLAN
14	ES-02	EROSION & SEDIMENT CONTROL PLAN
15	ED-01	EROSION & SEDIMENT CONTROL DETAILS
16	EN-01	EROSION & SEDIMENT CONTROL NOTES
17	MT-01	TEMPORARY TRAFFIC CONTROL PLAN

T:\2020\TRANSPORTATION\171166.10 CARROLL CO BRYNWOOD STORM DRAIN IMPROVEMENTS\CADD\PGN-0001_BRYNWOOD.DWG

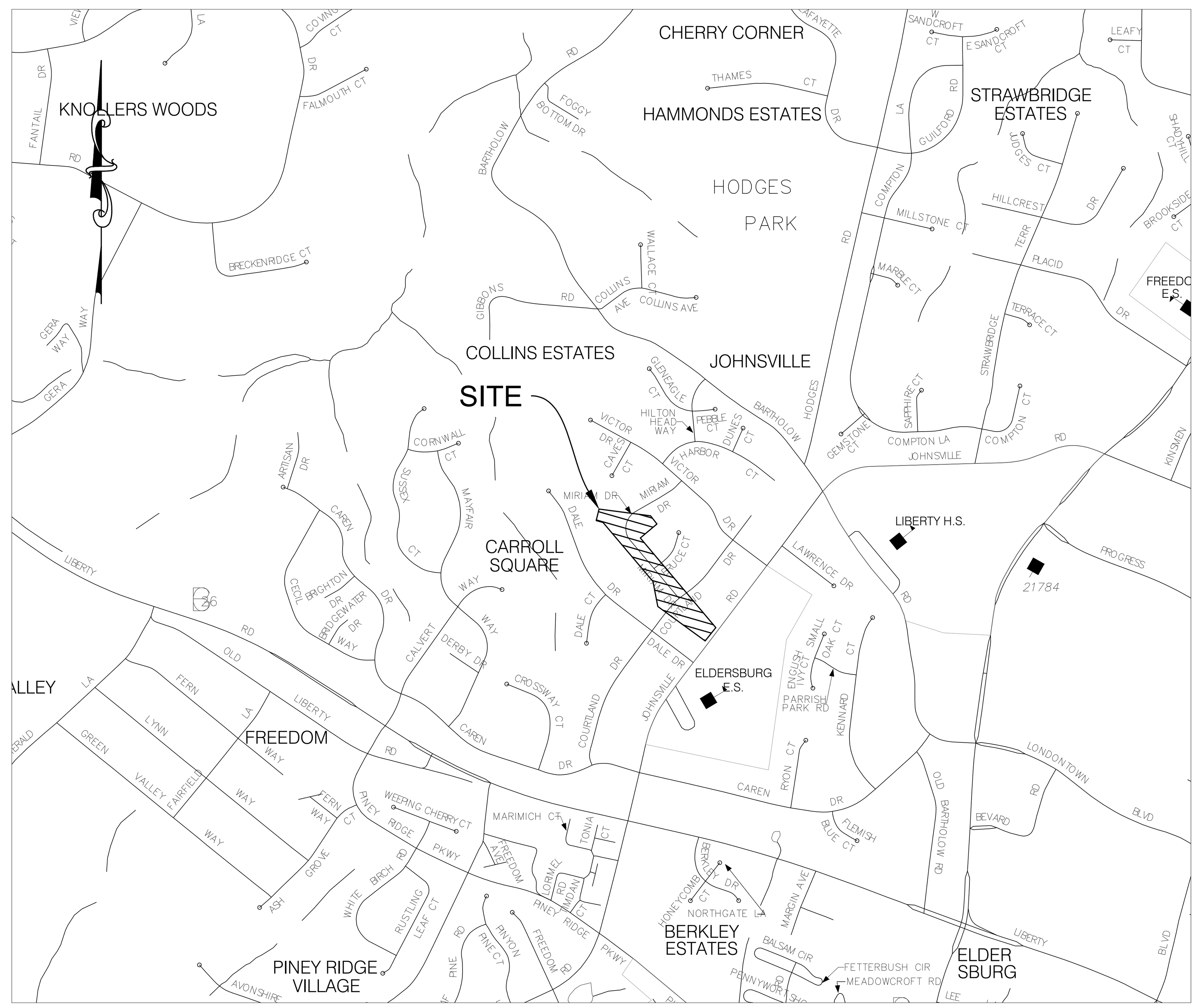

VICINITY MAP
1" = 1000'
ADC MAP: 29 GRID: K-9

CARROLL COUNTY BUREAU OF UTILITIES GENERAL NOTES:

1. THE DEPARTMENT OF PUBLIC WORKS, BUREAU OF UTILITIES "REGULATIONS, STANDARD SPECIFICATIONS AND DESIGN DETAILS FOR WATER AND SEWERAGE CONSTRUCTION IN CARROLL COUNTY, MARYLAND" LATEST EDITION ARE HEREBY MADE A PART OF THESE DOCUMENTS, INCLUDING ALL SUBSEQUENT ADDENDA OR MODIFICATIONS HERETO.
2. THE CONTRACTOR SHALL NOTIFY THE FOLLOWING COMPANIES AT LEAST 72 HOURS PRIOR TO STARTING ANY CONSTRUCTION:
   BALTIMORE GAS AND ELECTRIC..410-293-3147
   VERIZON..410-393-5793
   MISS UTILITY..1-800-257-7777
   CARROLL COUNTY BUREAU OF UTILITIES......................................410-386-2164
3. THE CONTRACTOR SHALL BE RESPONSIBLE FOR NOTIFYING THE OFFICE OF THE ENGINEER, CENTURY ENGINEERING, LLC (443-589-2400) OF ANY DISCREPANCIES IN THE PLANS OR IN THE RELATIONSHIP OF FINISHED GRADES AND EXISTING GRADES PRIOR TO START OF CONSTRUCTION.
4. THE LOCATION OF EXISTING UTILITIES IS SHOWN FOR THE CONVENIENCE OF THE CONTRACTOR ONLY. THE BUREAU OF UTILITIES (BOU), CARROLL COUNTY OR THE ENGINEER DO NOT WARRANT OR GUARANTEE THE CORRECTNESS OF THE INFORMATION GIVEN. THE CONTRACTOR MUST VERIFY THE EXISTENCE AND LOCATION OF ALL UTILITIES TO HIS OWN SATISFACTION.
5. ANY PAVING IN COUNTY ROADS DISTURBED BY THE CONTRACTOR'S OPERATION SHALL BE REPLACED WITH 18" OF COMPACTED CR-6 TO A MINIMUM OF 95% MODIFIED PROTOR ASTM D-1557. PERMANENT PAVING SHALL BE IN ACCORDANCE WITH COUNTY DETAIL NO. 128 ON SHEET DE-02. PERMIT COSTS THEREFORE SHALL BE INCLUDED IN UNIT PRICES BID AND THE SOLE RESPONSIBILITY OF THE CONTRACTOR.
6. IT SHALL BE DISTINCTLY UNDERSTOOD THAT FAILURE TO MENTION SPECIFICALLY ANY WORK WHICH WOULD NORMALLY BE REQUIRED TO COMPLETE THIS PROJECT SHALL NOT RELIEVE THE CONTRACTOR OF HIS RESPONSIBILITY TO PERFORM SUCH WORK.
7. ALL SAFETY MEASURES TO BE IMPLEMENTED DURING THE CONSTRUCTION OF THIS PROJECT ARE THE RESPONSIBILITY OF THE CONTRACTOR.
8. A GEOTECHNICAL ENGINEER SHOULD BE CONSULTED DURING THE CONSTRUCTION OF SLOPES GREATER THAN TEN (10) VERTICAL FEET AT SLOPES 2:1 OR GREATER.
9. HOUSE CONNECTIONS SHALL BE LOCATED AS SHOWN. IF ANY ADJUSTMENTS TO THESE LOCATIONS IS PROPOSED BY THE FIELD ENGINEER OR CONTRACTOR, THE DEVELOPER OR HIS ENGINEER SHALL BE CONSULTED TO THE PROPOSED CHANGE BEFORE INSTALLATION.
10. THE CONTRACTOR IS REQUIRED TO OBTAIN A PERMIT FROM THE BUREAU OF ROADS OPERATIONS PRIOR TO BEGINNING WORK IN A COUNTY ROAD RIGHT OF WAY. CONTACT BUREAU OF ROADS OPERATION AT 410-386-6717 A MINIMUM OF 72 HOURS PRIOR TO START OF CONSTRUCTION.
11. THE PUBLIC PORTION OF THE WATER HOUSE CONNECTION (WHC) AND/OR SEWER HOUSE CONNECTION (SHC) FROM THE WATER MAIN AND/OR SEWER MAIN TO THE METER VAULT AND/OR CLEAN OUT AT THE RIGHT OF WAY OR EASEMENT LINE FALLS UNDER THE PURVIEW OF BOU. CONTRACTOR SHALL CONTACT THE BUREAU AT 410-386-2164 TO SCHEDULE PRE-CONSTRUCTION MEETING AND INSPECTION A MINIMUM OF 72 HOURS PRIOR TO START OF CONSTRUCTION.
12. CONTRACTOR MUST BE PRE-QUALIFIED WITH DEPARTMENT OF PUBLIC WORKS TO CONSTRUCT PUBLIC WATER AND SEWER UTILITY WORK.
13. THE CONTRACTOR IS RESPONSIBLE FOR PROVIDING/SUPPLYING WATER TO SITE DURING CONSTRUCTION. THE BUREAU OF UTILITIES BULK WATER SERVICE CAN BE UTILIZED AT THE CONTRACTOR'S EXPENSE. METER HYDRANTS AND CONNECTION TO EXISTING INFRASTRUCTURE IS PROHIBITED. CONTACT UTILITIES AT 410-386-2164 FOR BULK WATER SERVICE INFO.
14. THE PRIVATE PORTION OF THE WHC AND/OR SHC FROM THE PRIVATE METER VAULTS AND/OR PRIVATE CLEAN OUT TO THE HOUSE FALLS UNDER THE PURVIEW OF BUREAU OF PERMITS AND INSPECTIONS. AS NEEDED, THE PLUMBING INSPECTOR SHALL INSPECT THE PRIVATE PORTION OF THE WHC AND/OR SHC. CONTRACTOR SHALL CONTACT BUREAU OF PERMITS AND INSPECTIONS AT 410-386-2674 TO OBTAIN REQUIRED PLUMBING PERMIT. INSPECTION OF PRIVATE WATER AND SEWER MAINS AND INFRASTRUCTURE SHALL BE THE RESPONSIBILITY OF THE DEVELOPER/CONTRACTOR.
15. MAINTENANCE OF PRIVATE ON-SITE WATER AND SEWER BEYOND RIGHT-OF-WAY AND/OR UTILITY EASEMENT SHALL BE THE RESPONSIBILITY OF THE PROPERTY OWNER.

CARROLL COUNTY BUREAU OF UTILITIES WATER NOTES:

1. ALL PUBLIC WATER MAIN PIPE SHALL BE DUCTILE IRON PIPE (DIP) CLASS 52 OR C-900 AND APPROVED BY BOU. WATER MAIN PIPE SHALL BE INSTALLED IN ACCORDANCE WITH THE MANUFACTURERS SPECIFICATIONS AND THE DEPARTMENT OF PUBLIC WORKS, BUREAU OF UTILITIES "REGULATIONS, STANDARD SPECIFICATIONS AND DESIGN DETAILS FOR WATER AND SEWERAGE CONSTRUCTION IN CARROLL COUNTY, MARYLAND" LATEST EDITION.
2. TEES, VALVES, BENDS FITTINGS, CAPS, ETC. SHALL BE MEGA LUGGED AND BUTTRESSED IN ACCORDANCE WITH STANDARD DETAILS. PROVIDE FIELD LOCK GASKETS IN ALL BELL END PIPE CONNECTIONS WHERE MEGA LUGS ARE NOT REQUIRED.
3. FIRE HYDRANTS SHALL BE STRAPPED TO VALVES AND VALVES STRAPPED TO TEES AT THE MAIN IN ACCORDANCE WITH STANDARD DETAILS. FIRE HYDRANT INTERVALS SHALL BE IN ACCORDANCE WITH SPECIFICATIONS BASED ON LOT SIZE.
4. A VALVE IS REQUIRED IN EACH DIRECTION AT ALL TEES OR CROSSES, HIGH AND LOW POINTS AND AT SPECIFIC INTERVALS AS NOTED ON APPROVED WATER AND SEWER PLANS. AN ADJUSTABLE ROADWAY VALVE BOX SHALL BE FURNISHED AND INSTALLED WITH EACH VALVE. THE RIM OF THE VALVE BOX SHALL BE SET FLUSH WITH EXISTING GROUND OR PROPOSED GRADE.
5. RESIDENTIAL WATER METERS SHALL BE 1" AND LOCATED WITHIN A METER VAULT CONSTRUCTED AND SET IN ACCORDANCE WITH BOU STANDARD DETAIL W-7/W-11 LATEST VERSION. EXTEND WHC TO RIGHT OF WAY OR UTILITY EASEMENT.
6. RESIDENTIAL WATER HOUSE CONNECTIONS (WHC) SHALL BE 1.5" TYPE 'K' SOFT COPPER TUBING.
7. CONTRACTOR SHALL TUNNEL PAST EXISTING UNDERGROUND UTILITIES AS MAY BE NECESSARY TO AVOID DISRUPTIONS OF ANY SERVICES.
8. CONTRACTOR SHALL NOT INTERRUPT EXISTING UTILITY SERVICES WITHOUT WRITTEN PERMISSION FROM THE OWNER OF THE UTILITY A MINIMUM OF 72 HOURS PRIOR TO THE INTERRUPTION. WATER CONNECTIONS TO EXISTING MAINS SHALL BE MADE DURING THE HOURS OF 10:00 AM AND 3:00 PM AND UNDER THE SUPERVISION OF BOU PERSONNEL.
9. DISINFECTION OF WATER MAINS SHALL BE CARRIED OUT IN ACCORDANCE WITH THE STANDARD SPECIFICATIONS AND DESIGN DETAILS, SECTION 4, SUBSECTION 12 - DISINFECTION OF MAINS.
10. PUBLIC WATER MAINS AND HYDRANT CONNECTIONS SHALL BE TESTED BY THE CONTRACTOR IN ACCORDANCE WITH SECTION 4, SUBSECTION 15A AND B -- TESTING MAINS.
11. IF WATER HOUSE CONNECTIONS CROSS SEWER HOUSE CONNECTIONS, THERE SHALL BE A MINIMUM 1'-0" VERTICAL CLEARANCE BETWEEN WATER AND SEWER UNLESS OTHERWISE SPECIFIED. WATER SHALL BE ABOVE THE SEWER.

CARROLL COUNTY BUREAU OF UTILITIES SEWER NOTES:

1. ALL PUBLIC SEWER PIPES SHALL BE MANUFACTURED IN ACCORDANCE WITH ASTM D-3034 STANDARD SPECIFICATION FOR TYPE PSM POLY VINYL CHLORIDE (PVC) SEWER PIPE AND FITTINGS. ALL PUBLIC GRAVITY SEWER SHALL BE MINIMUM SDR-26 TYPE OR EQUIVALENT FOR STANDARD DEPTHS UP TO 16'. SEWER PIPE AND FITTINGS SHALL UTILIZE A RUBBER RING JOINT. MAINLINE SHALL BE MINIMUM 8" INSIDE DIAMETER AND SHC'S SHALL BE MINIMUM 6" INSIDE DIAMETER. SEWER PIPE SHALL HAVE ASTM EMBEDDED MATERIAL CLASSIFICATION OF CL. 1, 6" OF NO. 57 STONE ALL AROUND PIPE TO 6" ABOVE TOP.
2. ALL PUBLIC GRAVITY SEWER 16' OR DEEPER SHALL BE C900 DR18 OR EQUIVALENT WITH JOINTS IN COMPLIANCE WITH ASTM D-3139 AND GASKETS IN COMPLIANCE WITH ASTM F-477. PUBLIC GRAVITY SEWER BELOW 25' SHALL REQUIRE FURTHER EVALUATION OF MATERIAL TYPE AND CONSTRUCTION METHODS TO BE APPROVED BY BOU.
3. ALL PUBLIC FORCE MAIN SEWER SHALL BE MINIMUM DIP CL. 52 TYPE OR EQUIVALENT.
4. SEWER HOUSE CONNECTIONS (SHC) SHALL BE MINIMUM 6" PVC SDR -26 FOR THE PUBLIC PORTION. SHC'S SHALL BE PER SPECIFICATIONS NOTED ABOVE AND CONSTRUCTED IN ACCORDANCE WITH BOU STANDARD DETAILS S-15, S-16 AND S-21 LATEST VERSION.
5. SEWER HOUSE CONNECTIONS (SHC) SHALL BE LOCATED AS SHOWN ON THE EXISTING UTILITY PLANS, SHEETS UT-01 AND UT-02, WITH RESPECT TO WATER SERVICE LOCATIONS AND MEET CLEARANCE REQUIREMENTS, ETC., AS DESCRIBED BELOW AND IN THE DESIGN MANUAL NOTED IN ITEM NO.1 OF GENERAL NOTES. ANY PROPOSED CHANGE TO THESE LOCATIONS MUST BE APPROVED BY THE BOU, DESIGN ENGINEER AND DEVELOPER.
6. ALL APPURTENANCES TO THE PUBLIC SEWER LINES SHALL BE CONSTRUCTED IN ACCORDANCE WITH BOU STANDARD DETAILS CITED IN THE APPROVED WATER AND SEWER CONSTRUCTION PLANS.
7. IN ADDITION TO THE CLEARANCES DESCRIBED IN THE DESIGN MANUAL REGULATIONS, THE SEWER LINES SHALL BE LOCATED A MINIMUM 3'-0" CLEAR OF THE FACE OF ANY CURBS, POLES, UTILITY BOXES, GUIDE RAIL, ETC.
8. SEWER MANHOLES SHALL BE SET TO FINISHED GRADE UPON INSTALLATION AND TAPERED WITH BLACK TOP TO MEET BASE PAVING GRADE UNTIL FINAL PAVING IS INSTALLED. PROTECTION OF ALL WATER AND SEWER APPURTENANCES IS THE RESPONSIBILITY OF THE CONTRACTOR UNTIL PUBLIC ROAD(S) ARE CONVEYED TO CARROLL COUNTY.
9. UPON INSTALLATION OF SEWER MAINS AND HOUSE CONNECTIONS AND AFTER PLACEMENT OF THE COMPACTED BACK FILL TO ORIGINAL GROUND LINE OR PROPOSED PAVING SUBGRADE, THE SEWER SHALL BE TESTED FOR ACCEPTABILITY. THE PROCEDURES FOR TESTING SHALL BE IN ACCORDANCE WITH THE LATEST VERSION OF INDICATED SUBSECTIONS OF THE DESIGN MANUAL AS FOLLOWS:
   TESTS FOR ACCEPTABILITY OF SEWERS -- SUBSECTION 5-14.
   ELEVATION AND ALIGNMENT CHECKS -- SUBSECTION 5-15.
   CLEANING OF PIPELINES -- SUBSECTION 5-16.
   AIR TEST OF SEWER FOR ACCEPTABILITY -- SUBSECTION 5-17.

OWNER / DEVELOPER:

CARROLL COUNTY
DEPARTMENT OF LAND AND RESOURCE MANAGEMENT
BUREAU OF RESOURCE MANAGEMENT
225 N. CENTER ST
WESTMINSTER, MARYLAND 21157-5194
PHONE: 410.386.2668

LAND OWNERS:

RICHARD J. & MARY L. GULAS
5812 MIRIAM DRIVE - LOT 39
PARCEL: 0575 TAX MAP: 0073 GRID: 0004

JOHN S. & DEBORAH A. BOEHL
5814 MIRIAM DRIVE - LOT 40
PARCEL: 0576 TAX MAP: 0073 GRID: 0004

LYNN E. GRAHAM
5807 MIRIAM DRIVE - LOT 58
PARCEL: 0576 TAX MAP: 0073 GRID: 0004

ELAINE M. ROSS
5811 MIRIAM DRIVE - LOT 57
PARCEL: 0575 TAX MAP: 0073 GRID: 0004

MARY M. & KATHLEEN W. REYNOLDS
5830 MIRIAM DRIVE - LOT "PARCEL I"
PARCEL: 0575 TAX MAP: 0073 GRID: 0004

JEFFREY D. CREUTZER & KAREN M. HILNBRAND
1107 COURTLAND DRIVE - LOT 18A
PARCEL: 0575 TAX MAP: 0073 GRID: 0004

JOSEPH W. & LISA V. THORPE
1105 COURTLAND DRIVE - LOT 19A
PARCEL: 0575 TAX MAP: 0073 GRID: 0004

TIMOTHY & BRITTANY BECK
1103 COURTLAND DRIVE - LOT 20A
PARCEL: 0575 TAX MAP: 0073 GRID: 0004

WAYNE & LORI HOWES
1104 JOHNSVILLE ROAD - LOT 2A
PARCEL: 0575 TAX MAP: 0073 GRID: 0004

MARK L. & JILL E. MARCIANTE
1102 JOHNSVILLE ROAD - LOT 1A
PARCEL: 0575 TAX MAP: 0073 GRID: 0004

REVISIONS

NO.	DATE	DESCRIPTION

CENTURY ENGINEERING
CONSULTING ENGINEERS - PLANNERS
10710 GILROY ROAD
HUNT VALLEY, MARYLAND 21031
PHONE: (443) 589-2400 FAX: (443) 589-2401

CARROLL COUNTY BRYNWOOD STORM DRAIN IMPROVEMENTS

FINAL DESIGN

PROJECT CERTIFICATIONS

ENGINEER

I CERTIFY THAT THIS PLAN OF SEDIMENT CONTROL IS DESIGNED WITH MY PERSONAL KNOWLEDGE OF THE SITE CONDITION AND HAS BEEN DESIGNED TO THE STANDARDS AND SPECIFICATIONS ADOPTED BY THE CARROLL SOIL CONSERVATION DISTRICT.

THOMAS TURNER JR. — DATE: 11/11/2022

LICENSE NO.: 16997 — EXPIRATION DATE: 7/19/2024

OWNER / DEVELOPER

I CERTIFY THAT THIS PLAN OF SOIL EROSION & SEDIMENT CONTROL WILL BE IMPLEMENTED TO THE FULLEST EXTENT, AND ALL STRUCTURES WILL BE INSTALLED TO THE DESIGN AND SPECIFICATIONS AS SPELLED OUT IN THIS PLAN AND THAT ANY RESPONSIBLE PERSONNEL INVOLVED IN THIS CONSTRUCTION PROJECT WILL HAVE A CERTIFICATION OF ATTENDANCE AT A DEPARTMENT OF THE ENVIRONMENT APPROVED TRAINING PROGRAM FOR THE CONTROL OF SOIL EROSION AND SEDIMENT BEFORE BEGINNING THE PROJECT. I ALSO AUTHORIZE PERIODIC ON-SITE EVALUATION BY THE CARROLL SOIL CONSERVATION DISTRICT PERSONNEL AND COOPERATING AGENCIES.

DEVELOPER — DATE

OWNERS CERTIFICATION

I/WE CERTIFY THAT ALL PROPOSED WORK SHOWN ON THESE CONSTRUCTION DRAWING(S) HAS BEEN REVIEWED BY ME/US AND THAT I/WE FULLY UNDERSTAND WHAT IS NECESSARY TO ACCOMPLISH THIS WORK AND THAT THE WORK WILL BE CONDUCTED IN STRICT ACCORDANCE WITH THESE PLANS. I/WE ALSO UNDERSTAND THAT ANY CHANGES TO THESE PLANS WILL REQUIRE AN AMENDED PLAN TO BE REVIEWED AND APPROVED BY THE CARROLL COUNTY PLANNING AND ZONING COMMISSION BEFORE ANY CHANGE IN THE WORK IS MADE.

OWNER — DATE

CARROLL COUNTY DEPARTMENT OF PUBLIC WORKS
BUREAU OF UTILITIES

BY: DATE:

CARROLL SOIL CONSERVATION DISTRICT

THIS PLAN IS APPROVED FOR SOIL EROSION AND SEDIMENT CONTROL BY THE CARROLL SOIL CONSERVATION DISTRICT.

BY: DATE:

TITLE: COVER SHEET

COUNTY FILE NO: GRO-20-0009	SCALE: N/A	DATE: 1/13/2023
SEAL: STATE OF MARYLAND, THOMAS G. TURNER, JR., NO. 16997, REGISTERED PROFESSIONAL ENGINEER	DESIGN: AW	CHECK: TT
	DWG NO: GN-01 OF GN-01	
	SHEET NO: 01 OF 17	

I HEREBY CERTIFY THAT THESE DOCUMENTS WERE PREPARED OR APPROVED BY ME, AND THAT I AM A DULY LICENSED PROFESSIONAL ENGINEER UNDER THE LAWS OF THE STATE OF MARYLAND.
LICENSE #: 16997 EXPIRES: 7/19/2024

TEST HOLE DATA					
NO.	NORTHING	EASTING	ELEVATION	UTILITY DESCRIPTION	REMARKS
2	636299.00	1323337.34	582.87	1" PLASTIC GAS CONNECTION	
4	636267.50	1323341.86	581.73	2" PLASTIC GAS MAIN	TEST HOLE LOCATION WAS NOT SURVEYED, ASSUMED FROM MISS UTILITY MARKING.
5	636229.60	1323308.71	584.39	1" PLASTIC GAS CONNECTION	
7	636180.18	1323328.41	586.89	1" PLASTIC GAS CONNECTION	
9	636089.26	1323393.71	593.71	1-1/4" PLASTIC GAS CONNECTION	
12	635954.25	1323507.95	603.92	1-3/4" METAL GAS CONNECTION	
13	635939.35	1323532.18	605.13	6" METAL WATER MAIN	
16	635853.71	1323591.93	609.01	1" PLASTIC GAS CONNECTION	
18	635830.68	1323612.04	610.63	1" PLASTIC GAS CONNECTION	

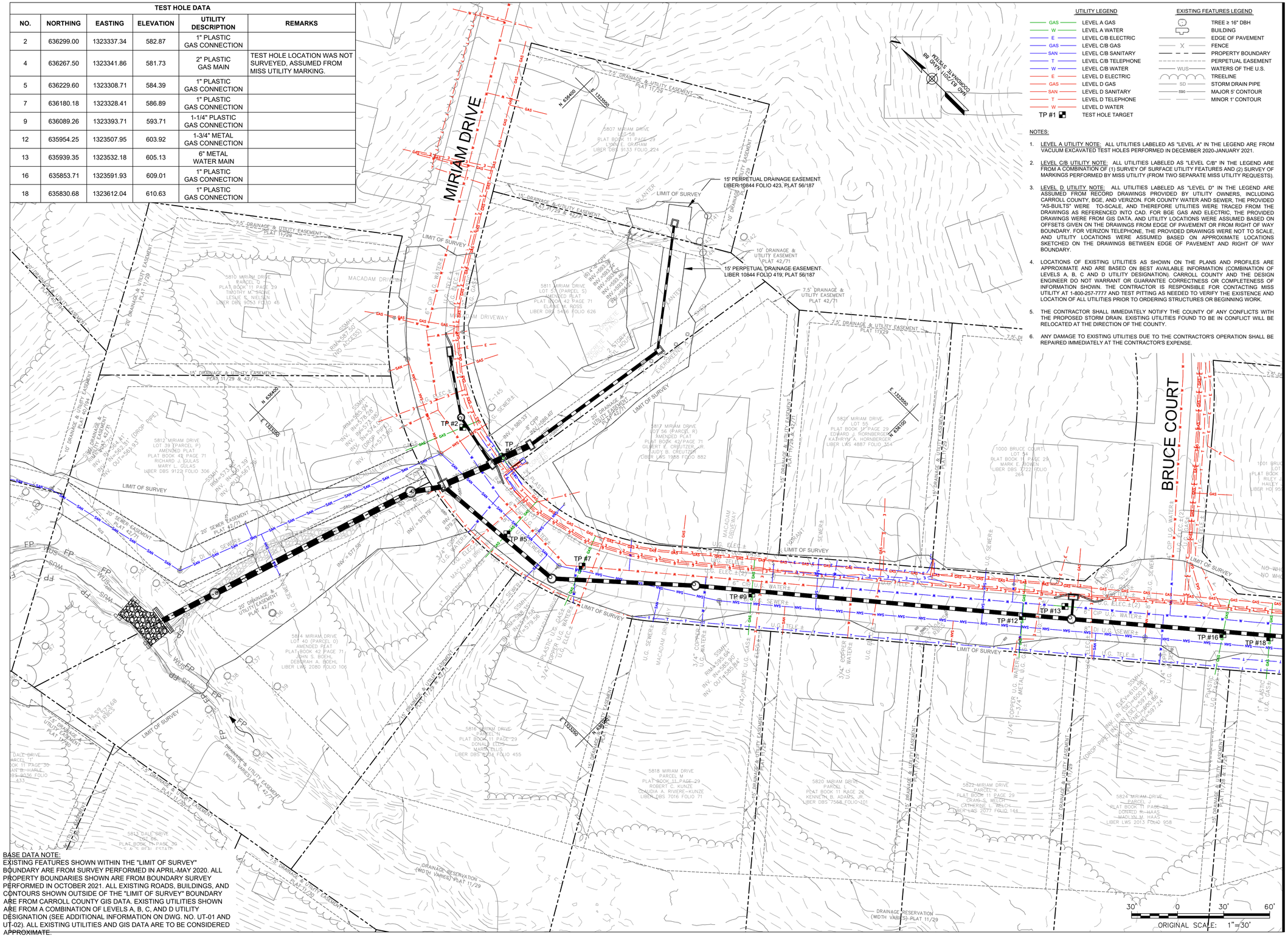

UTILITY LEGEND

- GAS — LEVEL A GAS
- W — LEVEL A WATER
- E — LEVEL C/B ELECTRIC
- GAS — LEVEL C/B GAS
- SAN — LEVEL C/B SANITARY
- T — LEVEL C/B TELEPHONE
- W — LEVEL C/B WATER
- E — LEVEL D ELECTRIC
- GAS — LEVEL D GAS
- SAN — LEVEL D SANITARY
- T — LEVEL D TELEPHONE
- W — LEVEL D WATER
- TP #1 — TEST HOLE TARGET

EXISTING FEATURES LEGEND

- TREE ≥ 16" DBH
- BUILDING
- EDGE OF PAVEMENT
- X — FENCE
- PROPERTY BOUNDARY
- PERPETUAL EASEMENT
- WUS — WATERS OF THE U.S.
- TREELINE
- SD — STORM DRAIN PIPE
- 590 — MAJOR 5' CONTOUR
- MINOR 1' CONTOUR

NOTES:

1. LEVEL A UTILITY NOTE: ALL UTILITIES LABELED AS "LEVEL A" IN THE LEGEND ARE FROM VACUUM EXCAVATED TEST HOLES PERFORMED IN DECEMBER 2020-JANUARY 2021.
2. LEVEL C/B UTILITY NOTE: ALL UTILITIES LABELED AS "LEVEL C/B" IN THE LEGEND ARE FROM A COMBINATION OF (1) SURVEY OF SURFACE UTILITY FEATURES AND (2) SURVEY OF MARKINGS PERFORMED BY MISS UTILITY (FROM TWO SEPARATE MISS UTILITY REQUESTS).
3. LEVEL D UTILITY NOTE: ALL UTILITIES LABELED AS "LEVEL D" IN THE LEGEND ARE ASSUMED FROM RECORD DRAWINGS PROVIDED BY UTILITY OWNERS, INCLUDING CARROLL COUNTY, BGE, AND VERIZON. FOR COUNTY WATER AND SEWER, THE PROVIDED "AS-BUILTS" WERE TO-SCALE, AND THEREFORE UTILITIES WERE TRACED FROM THE DRAWINGS AS REFERENCED INTO CAD. FOR BGE GAS AND ELECTRIC, THE PROVIDED DRAWINGS WERE FROM GIS DATA, AND UTILITY LOCATIONS WERE ASSUMED BASED ON OFFSETS GIVEN ON THE DRAWINGS FROM EDGE OF PAVEMENT OR FROM RIGHT OF WAY BOUNDARY. FOR VERIZON TELEPHONE, THE PROVIDED DRAWINGS WERE NOT TO SCALE, AND UTILITY LOCATIONS WERE ASSUMED BASED ON APPROXIMATE LOCATIONS SKETCHED ON THE DRAWINGS BETWEEN EDGE OF PAVEMENT AND RIGHT OF WAY BOUNDARY.
4. LOCATIONS OF EXISTING UTILITIES AS SHOWN ON THE PLANS AND PROFILES ARE APPROXIMATE AND ARE BASED ON BEST AVAILABLE INFORMATION (COMBINATION OF LEVELS A, B, C AND D UTILITY DESIGNATION). CARROLL COUNTY AND THE DESIGN ENGINEER DO NOT WARRANT OR GUARANTEE CORRECTNESS OR COMPLETENESS OF INFORMATION SHOWN. THE CONTRACTOR IS RESPONSIBLE FOR CONTACTING MISS UTILITY AT 1-800-257-7777 AND TEST PITTING AS NEEDED TO VERIFY THE EXISTENCE AND LOCATION OF ALL UTILITIES PRIOR TO ORDERING STRUCTURES OR BEGINNING WORK.
5. THE CONTRACTOR SHALL IMMEDIATELY NOTIFY THE COUNTY OF ANY CONFLICTS WITH THE PROPOSED STORM DRAIN. EXISTING UTILITIES FOUND TO BE IN CONFLICT WILL BE RELOCATED AT THE DIRECTION OF THE COUNTY.
6. ANY DAMAGE TO EXISTING UTILITIES DUE TO THE CONTRACTOR'S OPERATION SHALL BE REPAIRED IMMEDIATELY AT THE CONTRACTOR'S EXPENSE.

BASE DATA NOTE:
EXISTING FEATURES SHOWN WITHIN THE "LIMIT OF SURVEY" BOUNDARY ARE FROM SURVEY PERFORMED IN APRIL-MAY 2020. ALL PROPERTY BOUNDARIES SHOWN ARE FROM BOUNDARY SURVEY PERFORMED IN OCTOBER 2021. ALL EXISTING ROADS, BUILDINGS, AND CONTOURS SHOWN OUTSIDE OF THE "LIMIT OF SURVEY" BOUNDARY ARE FROM CARROLL COUNTY GIS DATA. EXISTING UTILITIES SHOWN ARE FROM A COMBINATION OF LEVELS A, B, C, AND D UTILITY DESIGNATION (SEE ADDITIONAL INFORMATION ON DWG. NO. UT-01 AND UT-02). ALL EXISTING UTILITIES AND GIS DATA ARE TO BE CONSIDERED APPROXIMATE.

OWNER / DEVELOPER:

CARROLL COUNTY
DEPARTMENT OF LAND AND RESOURCE MANAGEMENT
BUREAU OF RESOURCE MANAGEMENT
225 N. CENTER ST
WESTMINSTER, MARYLAND 21157-5194
PHONE: 410.386.2668

LAND OWNERS:

RICHARD J. & MARY L. GULAS
5812 MIRIAM DRIVE - LOT 39
PARCEL: 0575 TAX MAP: 0073 GRID: 0004

JOHN S. & DEBORAH A. BOEHL
5814 MIRIAM DRIVE - LOT 40
PARCEL: 0576 TAX MAP: 0073 GRID: 0004

LYNN E. GRAHAM
5807 MIRIAM DRIVE - LOT 58
PARCEL: 0576 TAX MAP: 0073 GRID: 0004

ELAINE M. ROSS
5811 MIRIAM DRIVE - LOT 57
PARCEL: 0575 TAX MAP: 0073 GRID: 0004

MARY M. & KATHLEEN W. REYNOLDS
5830 MIRIAM DRIVE - LOT "PARCEL I"
PARCEL: 0575 TAX MAP: 0073 GRID: 0004

JEFFREY D. CREUTZER & KAREN M. HILNBRAND
1107 COURTLAND DRIVE - LOT 18A
PARCEL: 0575 TAX MAP: 0073 GRID: 0004

JOSEPH W. & LISA V. THORPE
1105 COURTLAND DRIVE - LOT 19A
PARCEL: 0575 TAX MAP: 0073 GRID: 0004

TIMOTHY & BRITTANY BECK
1103 COURTLAND DRIVE - LOT 20A
PARCEL: 0575 TAX MAP: 0073 GRID: 0004

WAYNE & LORI HOWES
1104 JOHNSVILLE ROAD - LOT 2A
PARCEL: 0575 TAX MAP: 0073 GRID: 0004

MARK L. & JILL E. MARCIANTE
1102 JOHNSVILLE ROAD - LOT 1A
PARCEL: 0575 TAX MAP: 0073 GRID: 0004

REVISIONS		
NO.	DATE	DESCRIPTION

CENTURY ENGINEERING
CONSULTING ENGINEERS - PLANNERS
10710 GILROY ROAD
HUNT VALLEY, MARYLAND 21031
PHONE: (443) 589-2400 FAX: (443) 589-2401

CARROLL COUNTY BRYNWOOD STORM DRAIN IMPROVEMENTS

FINAL DESIGN

TITLE:

EXISTING UTILITY PLAN

COUNTY FILE NO: GRO-20-0009	SCALE: 1"=30'	DATE: 1/13/2023
SEAL: STATE OF MARYLAND THOMAS G. TURNER NO. 16997 REGISTERED PROFESSIONAL ENGINEER	DESIGN: AW	CHECK: TT
	DWG NO: UT-01 OF UT-02	
	SHEET NO: 02 OF 17	

I HEREBY CERTIFY THAT THESE DOCUMENTS WERE PREPARED OR APPROVED BY ME, AND THAT I AM A DULY LICENSED PROFESSIONAL ENGINEER UNDER THE LAWS OF THE STATE OF MARYLAND.

LICENSE #: 16997 EXPIRES: 7/19/2024

T:\2020\TRANSPORTATION\11186.15 CARROLL CO BRYNWOOD STORM DRAIN IMPROVEMENTS\CADD\FLIT\600W_BRYNWOOD.DWG

TEST HOLE DATA (CONTINUED)

NO.	NORTHING	EASTING	ELEVATION	UTILITY DESCRIPTION	REMARKS
20	635652.08	1323775.95	611.07	6" METAL WATER MAIN	
21	635632.36	1323802.58	611.75	8" METAL WATER MAIN	
22	635623.82	1323808.72	612.16	2" PLASTIC GAS MAIN	
24	635621.27	1323745.78	609.94	6" METAL WATER CONNECTION	
26	635541.61	1323725.61	610.34	2" PLASTIC GAS MAIN	
27	635546.33	1323729.68	610.42	2" PLASTIC GAS MAIN	

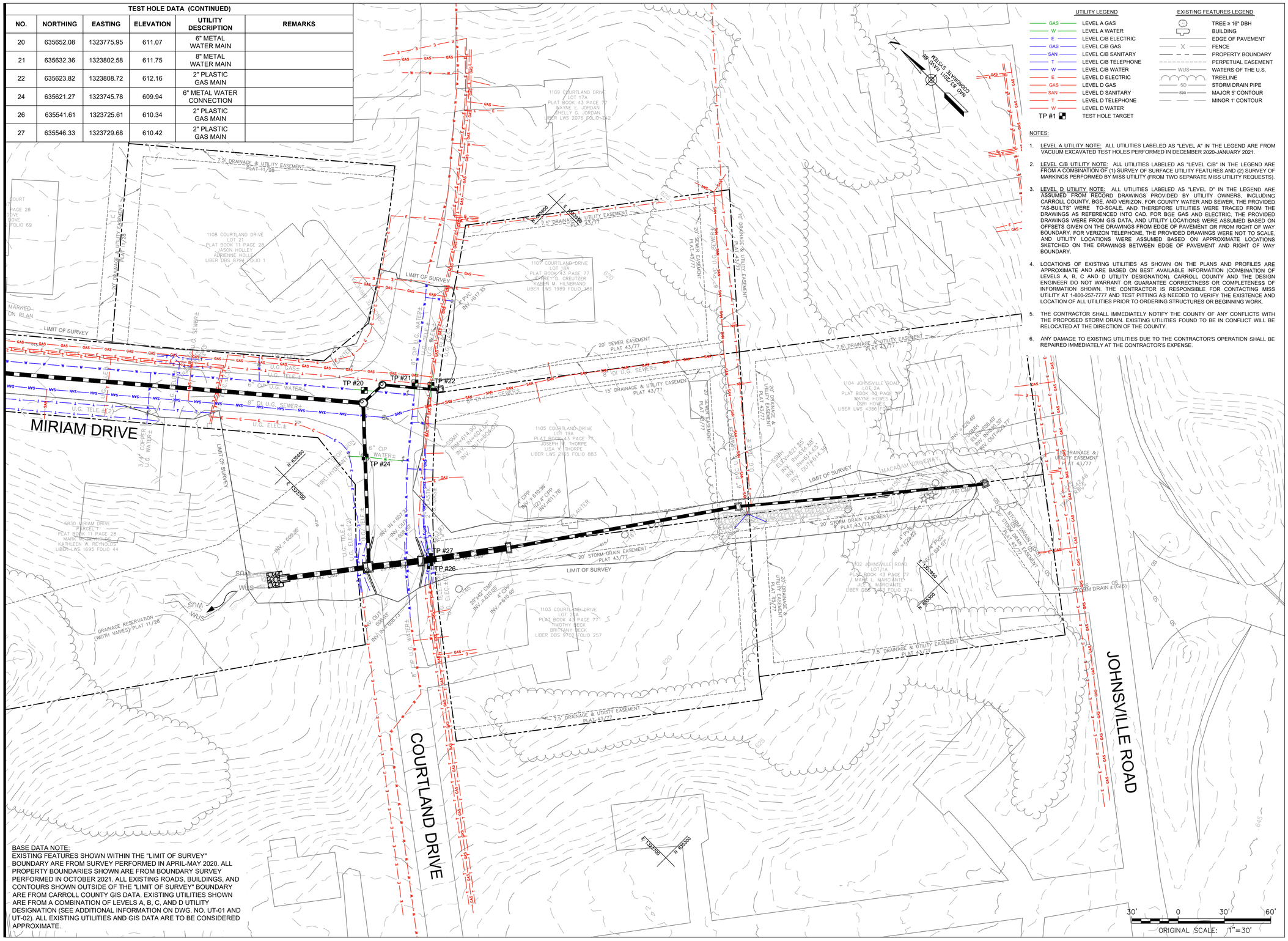

UTILITY LEGEND

GAS	LEVEL A GAS
W	LEVEL A WATER
E	LEVEL C/B ELECTRIC
GAS	LEVEL C/B GAS
SAN	LEVEL C/B SANITARY
T	LEVEL C/B TELEPHONE
W	LEVEL C/B WATER
E	LEVEL D ELECTRIC
GAS	LEVEL D GAS
SAN	LEVEL D SANITARY
T	LEVEL D TELEPHONE
W	LEVEL D WATER
TP #1	TEST HOLE TARGET

EXISTING FEATURES LEGEND

	TREE ≥ 16" DBH
	BUILDING
	EDGE OF PAVEMENT
X	FENCE
	PROPERTY BOUNDARY
	PERPETUAL EASEMENT
WUS	WATERS OF THE U.S.
	TREELINE
SD	STORM DRAIN PIPE
590	MAJOR 5' CONTOUR
	MINOR 1' CONTOUR

NOTES:

1. LEVEL A UTILITY NOTE: ALL UTILITIES LABELED AS "LEVEL A" IN THE LEGEND ARE FROM VACUUM EXCAVATED TEST HOLES PERFORMED IN DECEMBER 2020-JANUARY 2021.
2. LEVEL C/B UTILITY NOTE: ALL UTILITIES LABELED AS "LEVEL C/B" IN THE LEGEND ARE FROM A COMBINATION OF (1) SURVEY OF SURFACE UTILITY FEATURES AND (2) SURVEY OF MARKINGS PERFORMED BY MISS UTILITY (FROM TWO SEPARATE MISS UTILITY REQUESTS).
3. LEVEL D UTILITY NOTE: ALL UTILITIES LABELED AS "LEVEL D" IN THE LEGEND ARE ASSUMED FROM RECORD DRAWINGS PROVIDED BY UTILITY OWNERS, INCLUDING CARROLL COUNTY, BGE, AND VERIZON. FOR COUNTY WATER AND SEWER, THE PROVIDED "AS-BUILTS" WERE TO-SCALE, AND THEREFORE UTILITIES WERE TRACED FROM THE DRAWINGS AS REFERENCED INTO CAD. FOR BGE GAS AND ELECTRIC, THE PROVIDED DRAWINGS WERE FROM GIS DATA, AND UTILITY LOCATIONS WERE ASSUMED BASED ON OFFSETS GIVEN ON THE DRAWINGS FROM EDGE OF PAVEMENT OR FROM RIGHT OF WAY BOUNDARY. FOR VERIZON TELEPHONE, THE PROVIDED DRAWINGS WERE NOT TO SCALE, AND UTILITY LOCATIONS WERE ASSUMED BASED ON APPROXIMATE LOCATIONS SKETCHED ON THE DRAWINGS BETWEEN EDGE OF PAVEMENT AND RIGHT OF WAY BOUNDARY.
4. LOCATIONS OF EXISTING UTILITIES AS SHOWN ON THE PLANS AND PROFILES ARE APPROXIMATE AND ARE BASED ON BEST AVAILABLE INFORMATION (COMBINATION OF LEVELS A, B, C AND D UTILITY DESIGNATION), CARROLL COUNTY AND THE DESIGN ENGINEER DO NOT WARRANT OR GUARANTEE CORRECTNESS OR COMPLETENESS OF INFORMATION SHOWN. THE CONTRACTOR IS RESPONSIBLE FOR CONTACTING MISS UTILITY AT 1-800-257-7777 AND TEST PITTING AS NEEDED TO VERIFY THE EXISTENCE AND LOCATION OF ALL UTILITIES PRIOR TO ORDERING STRUCTURES OR BEGINNING WORK.
5. THE CONTRACTOR SHALL IMMEDIATELY NOTIFY THE COUNTY OF ANY CONFLICTS WITH THE PROPOSED STORM DRAIN. EXISTING UTILITIES FOUND TO BE IN CONFLICT WILL BE RELOCATED AT THE DIRECTION OF THE COUNTY.
6. ANY DAMAGE TO EXISTING UTILITIES DUE TO THE CONTRACTOR'S OPERATION SHALL BE REPAIRED IMMEDIATELY AT THE CONTRACTOR'S EXPENSE.

BASE DATA NOTE:
EXISTING FEATURES SHOWN WITHIN THE "LIMIT OF SURVEY" BOUNDARY ARE FROM SURVEY PERFORMED IN APRIL-MAY 2020. ALL PROPERTY BOUNDARIES SHOWN ARE FROM BOUNDARY SURVEY PERFORMED IN OCTOBER 2021. ALL EXISTING ROADS, BUILDINGS, AND CONTOURS SHOWN OUTSIDE OF THE "LIMIT OF SURVEY" BOUNDARY ARE FROM CARROLL COUNTY GIS DATA. EXISTING UTILITIES SHOWN ARE FROM A COMBINATION OF LEVELS A, B, C, AND D UTILITY DESIGNATION (SEE ADDITIONAL INFORMATION ON DWG. NO. UT-01 AND UT-02). ALL EXISTING UTILITIES AND GIS DATA ARE TO BE CONSIDERED APPROXIMATE.

OWNER / DEVELOPER:

CARROLL COUNTY
DEPARTMENT OF LAND AND RESOURCE MANAGEMENT
BUREAU OF RESOURCE MANAGEMENT
225 N. CENTER ST
WESTMINSTER, MARYLAND 21157-5194
PHONE: 410.386.2668

LAND OWNERS:

RICHARD J. & MARY L. GULAS
5812 MIRIAM DRIVE - LOT 39
PARCEL: 0575 TAX MAP: 0073 GRID: 0004

JOHN S. & DEBORAH A. BOEHL
5814 MIRIAM DRIVE - LOT 40
PARCEL: 0576 TAX MAP: 0073 GRID: 0004

LYNN E. GRAHAM
5807 MIRIAM DRIVE - LOT 58
PARCEL: 0576 TAX MAP: 0073 GRID: 0004

ELAINE M. ROSS
5811 MIRIAM DRIVE - LOT 57
PARCEL: 0575 TAX MAP: 0073 GRID: 0004

MARY M. & KATHLEEN W. REYNOLDS
5830 MIRIAM DRIVE - LOT "PARCEL I"
PARCEL: 0575 TAX MAP: 0073 GRID: 0004

JEFFREY D. CREUTZER & KAREN M. HILNBRAND
1107 COURTLAND DRIVE - LOT 18A
PARCEL: 0575 TAX MAP: 0073 GRID: 0004

JOSEPH W. & LISA V. THORPE
1105 COURTLAND DRIVE - LOT 19A
PARCEL: 0575 TAX MAP: 0073 GRID: 0004

TIMOTHY & BRITTANY BECK
1103 COURTLAND DRIVE - LOT 20A
PARCEL: 0575 TAX MAP: 0073 GRID: 0004

WAYNE & LORI HOWES
1104 JOHNSVILLE ROAD - LOT 2A
PARCEL: 0575 TAX MAP: 0073 GRID: 0004

MARK L. & JILL E. MARCIANTE
1102 JOHNSVILLE ROAD - LOT 1A
PARCEL: 0575 TAX MAP: 0073 GRID: 0004

REVISIONS		
NO.	DATE	DESCRIPTION

CENTURY ENGINEERING
CONSULTING ENGINEERS - PLANNERS
10710 GILROY ROAD
HUNT VALLEY, MARYLAND 21031
PHONE: (443) 589-2400 FAX: (443) 589-2401

CARROLL COUNTY BRYNWOOD STORM DRAIN IMPROVEMENTS

FINAL DESIGN

TITLE:

EXISTING UTILITY PLAN

COUNTY FILE NO: GRO-20-0009	SCALE: 1"=30'	DATE: 1/13/2023
SEAL: STATE OF MARYLAND THOMAS G. TURNER JR. NO. 16997 REGISTERED PROFESSIONAL ENGINEER	DESIGN: AW	CHECK: TT
	DWG NO: UT-02 OF UT-02	
	SHEET NO: 03 OF 17	

I HEREBY CERTIFY THAT THESE DOCUMENTS WERE PREPARED OR APPROVED BY ME, AND THAT I AM A DULY LICENSED PROFESSIONAL ENGINEER UNDER THE LAWS OF THE STATE OF MARYLAND.

LICENSE # 16997 EXPIRES 7/19/2024

T:\2020\CTY\BRANDYWINE\IMPROVEMENTS\CAROTT\1196-01\CARROLL CO BRYNWOOD STORM\MIRIAM\IMPROVEMENTS\CAROTT-2020 BRYNWOOD.DWG

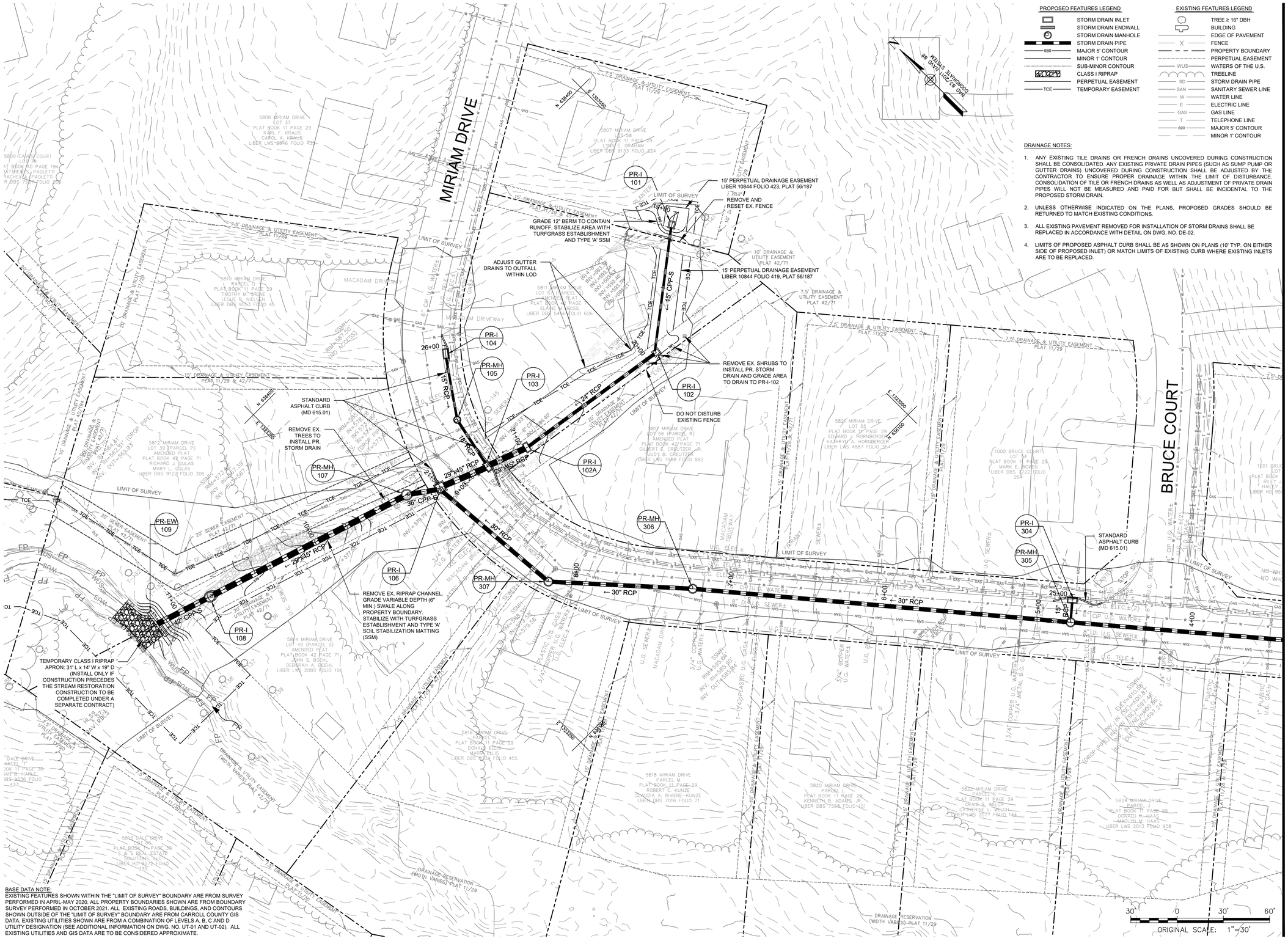

PROPOSED FEATURES LEGEND

- STORM DRAIN INLET
- STORM DRAIN ENDWALL
- STORM DRAIN MANHOLE
- STORM DRAIN PIPE
- 560 MAJOR 5' CONTOUR
- MINOR 1' CONTOUR
- SUB-MINOR CONTOUR
- CLASS I RIPRAP
- PERPETUAL EASEMENT
- TCE TEMPORARY EASEMENT

EXISTING FEATURES LEGEND

- TREE ≥ 16" DBH
- BUILDING
- EDGE OF PAVEMENT
- X FENCE
- PROPERTY BOUNDARY
- PERPETUAL EASEMENT
- WUS WATERS OF THE U.S.
- TREELINE
- SD STORM DRAIN PIPE
- SAN SANITARY SEWER LINE
- W WATER LINE
- E ELECTRIC LINE
- GAS GAS LINE
- T TELEPHONE LINE
- 580 MAJOR 5' CONTOUR
- MINOR 1' CONTOUR

DRAINAGE NOTES:

1. ANY EXISTING TILE DRAINS OR FRENCH DRAINS UNCOVERED DURING CONSTRUCTION SHALL BE CONSOLIDATED. ANY EXISTING PRIVATE DRAIN PIPES (SUCH AS SUMP PUMP OR GUTTER DRAINS) UNCOVERED DURING CONSTRUCTION SHALL BE ADJUSTED BY THE CONTRACTOR TO ENSURE PROPER DRAINAGE WITHIN THE LIMIT OF DISTURBANCE. CONSOLIDATION OF TILE OR FRENCH DRAINS AS WELL AS ADJUSTMENT OF PRIVATE DRAIN PIPES WILL NOT BE MEASURED AND PAID FOR BUT SHALL BE INCIDENTAL TO THE PROPOSED STORM DRAIN.
2. UNLESS OTHERWISE INDICATED ON THE PLANS, PROPOSED GRADES SHOULD BE RETURNED TO MATCH EXISTING CONDITIONS.
3. ALL EXISTING PAVEMENT REMOVED FOR INSTALLATION OF STORM DRAINS SHALL BE REPLACED IN ACCORDANCE WITH DETAIL ON DWG. NO. DE-02.
4. LIMITS OF PROPOSED ASPHALT CURB SHALL BE AS SHOWN ON PLANS (10' TYP. ON EITHER SIDE OF PROPOSED INLET) OR MATCH LIMITS OF EXISTING CURB WHERE EXISTING INLETS ARE TO BE REPLACED.

BASE DATA NOTE:
EXISTING FEATURES SHOWN WITHIN THE "LIMIT OF SURVEY" BOUNDARY ARE FROM SURVEY PERFORMED IN APRIL-MAY 2020. ALL PROPERTY BOUNDARIES SHOWN ARE FROM BOUNDARY SURVEY PERFORMED IN OCTOBER 2021. ALL EXISTING ROADS, BUILDINGS, AND CONTOURS SHOWN OUTSIDE OF THE "LIMIT OF SURVEY" BOUNDARY ARE FROM CARROLL COUNTY GIS DATA. EXISTING UTILITIES SHOWN ARE FROM A COMBINATION OF LEVELS A, B, C AND D UTILITY DESIGNATION (SEE ADDITIONAL INFORMATION ON DWG. NO. UT-01 AND UT-02). ALL EXISTING UTILITIES AND GIS DATA ARE TO BE CONSIDERED APPROXIMATE.

OWNER / DEVELOPER:

CARROLL COUNTY
DEPARTMENT OF LAND AND RESOURCE MANAGEMENT
BUREAU OF RESOURCE MANAGEMENT
225 N. CENTER ST
WESTMINSTER, MARYLAND 21157-5194
PHONE: 410.386.2668

LAND OWNERS:

RICHARD J. & MARY L. GULAS
5812 MIRIAM DRIVE - LOT 39
PARCEL: 0575 TAX MAP: 0073 GRID: 0004

JOHN S. & DEBORAH A. BOEHL
5814 MIRIAM DRIVE - LOT 40
PARCEL: 0576 TAX MAP: 0073 GRID: 0004

LYNN E. GRAHAM
5807 MIRIAM DRIVE - LOT 58
PARCEL: 0576 TAX MAP: 0073 GRID: 0004

ELAINE M. ROSS
5811 MIRIAM DRIVE - LOT 57
PARCEL: 0575 TAX MAP: 0073 GRID: 0004

MARY M. & KATHLEEN W. REYNOLDS
5830 MIRIAM DRIVE - LOT "PARCEL I"
PARCEL: 0575 TAX MAP: 0073 GRID: 0004

JEFFREY D. CREUTZER & KAREN M. HILNBRAND
1107 COURTLAND DRIVE - LOT 18A
PARCEL: 0575 TAX MAP: 0073 GRID: 0004

JOSEPH W. & LISA V. THORPE
1105 COURTLAND DRIVE - LOT 19A
PARCEL: 0575 TAX MAP: 0073 GRID: 0004

TIMOTHY & BRITTANY BECK
1103 COURTLAND DRIVE - LOT 20A
PARCEL: 0575 TAX MAP: 0073 GRID: 0004

WAYNE & LORI HOWES
1104 JOHNSVILLE ROAD - LOT 2A
PARCEL: 0575 TAX MAP: 0073 GRID: 0004

MARK L. & JILL E. MARCIANTE
1102 JOHNSVILLE ROAD - LOT 1A
PARCEL: 0575 TAX MAP: 0073 GRID: 0004

REVISIONS

NO.	DATE	DESCRIPTION

CENTURY ENGINEERING
CONSULTING ENGINEERS - PLANNERS
10710 GILROY ROAD
HUNT VALLEY, MARYLAND 21031
PHONE: (443) 589-2400 FAX: (443) 589-2401

CARROLL COUNTY BRYNWOOD STORM DRAIN IMPROVEMENTS

FINAL DESIGN

TITLE:

DRAINAGE PLAN

COUNTY FILE NO: GRO-20-0009	SCALE: 1"=30'	DATE: 1/13/2023
SEAL: STATE OF MARYLAND THOMAS G. TURNER NO. 16997 REGISTERED PROFESSIONAL ENGINEER	DESIGN: AW	CHECK: TT
	DWG NO: DD-01 OF DD-02	
	SHEET NO: 04 OF 17	

I HEREBY CERTIFY THAT THESE DOCUMENTS WERE PREPARED OR APPROVED BY ME, AND THAT I AM A DULY LICENSED PROFESSIONAL ENGINEER UNDER THE LAWS OF THE STATE OF MARYLAND.
LICENSE #: 16997 EXPIRES: 7/19/2024

T:\2020\TRANSPORTATION\17188-10 CARROLL CO DRAINAGE STUDY\DRAINAGE\MAINTENANCE\PLAN\DD-02.DWG

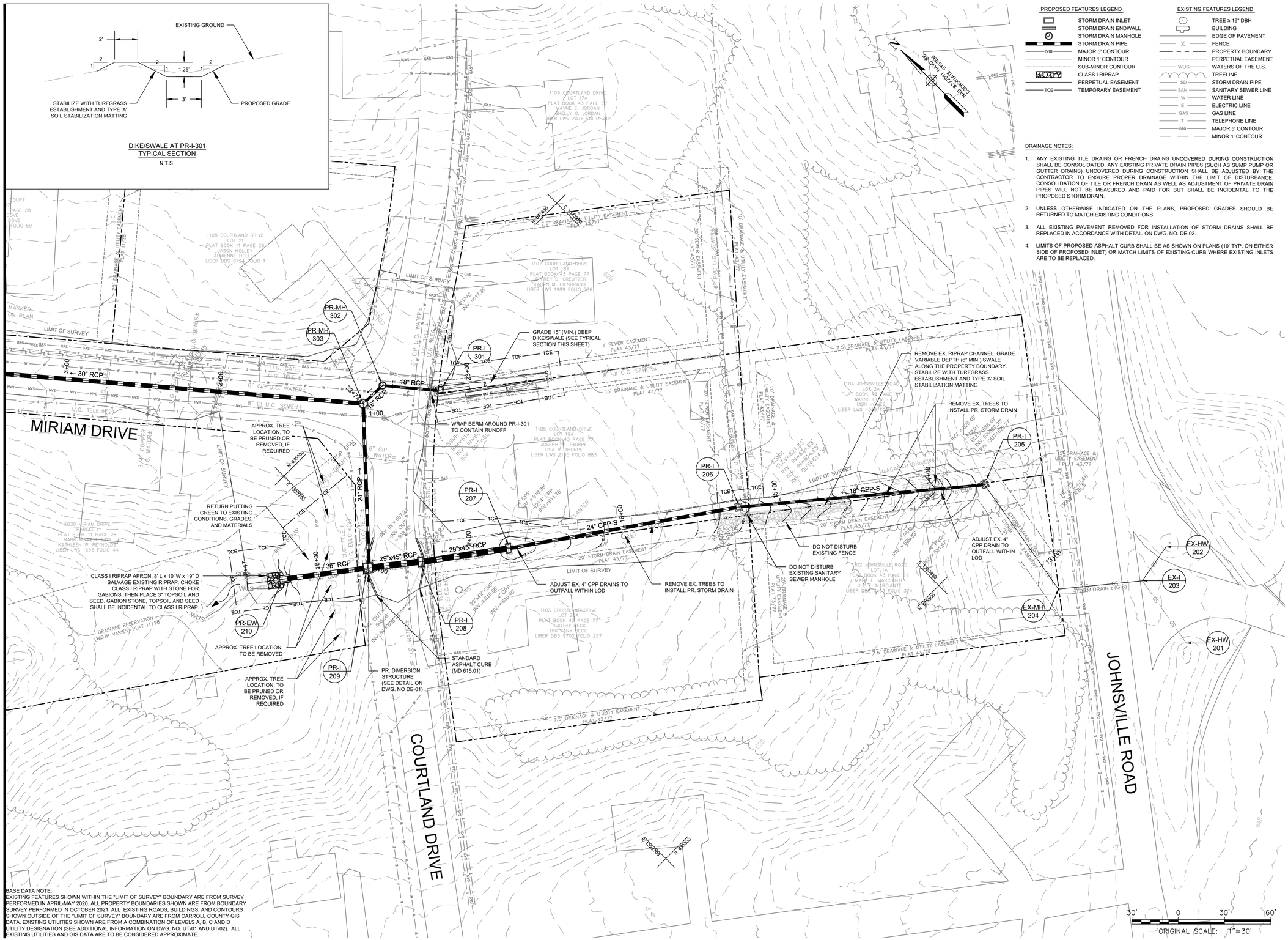

BASE DATA NOTE:
EXISTING FEATURES SHOWN WITHIN THE "LIMIT OF SURVEY" BOUNDARY ARE FROM SURVEY PERFORMED IN APRIL-MAY 2020. ALL PROPERTY BOUNDARIES SHOWN ARE FROM BOUNDARY SURVEY PERFORMED IN OCTOBER 2021. ALL EXISTING ROADS, BUILDINGS, AND CONTOURS SHOWN OUTSIDE OF THE "LIMIT OF SURVEY" BOUNDARY ARE FROM CARROLL COUNTY GIS DATA. EXISTING UTILITIES SHOWN ARE FROM A COMBINATION OF LEVELS A, B, C AND D UTILITY DESIGNATION (SEE ADDITIONAL INFORMATION ON DWG. NO. UT-01 AND UT-02). ALL EXISTING UTILITIES AND GIS DATA ARE TO BE CONSIDERED APPROXIMATE.

PROPOSED FEATURES LEGEND

- STORM DRAIN INLET
- STORM DRAIN ENDWALL
- STORM DRAIN MANHOLE
- STORM DRAIN PIPE
- 560 MAJOR 5' CONTOUR
- MINOR 1' CONTOUR
- SUB-MINOR CONTOUR
- CLASS I RIPRAP
- PERPETUAL EASEMENT
- TCE TEMPORARY EASEMENT

EXISTING FEATURES LEGEND

- TREE ≥ 16" DBH
- BUILDING
- EDGE OF PAVEMENT
- X FENCE
- PROPERTY BOUNDARY
- PERPETUAL EASEMENT
- WUS WATERS OF THE U.S.
- TREELINE
- SD STORM DRAIN PIPE
- SAN SANITARY SEWER LINE
- W WATER LINE
- E ELECTRIC LINE
- GAS GAS LINE
- T TELEPHONE LINE
- 590 MAJOR 5' CONTOUR
- MINOR 1' CONTOUR

DRAINAGE NOTES:

1. ANY EXISTING TILE DRAINS OR FRENCH DRAINS UNCOVERED DURING CONSTRUCTION SHALL BE CONSOLIDATED. ANY EXISTING PRIVATE DRAIN PIPES (SUCH AS SUMP PUMP OR GUTTER DRAINS) UNCOVERED DURING CONSTRUCTION SHALL BE ADJUSTED BY THE CONTRACTOR TO ENSURE PROPER DRAINAGE WITHIN THE LIMIT OF DISTURBANCE. CONSOLIDATION OF TILE OR FRENCH DRAIN AS WELL AS ADJUSTMENT OF PRIVATE DRAIN PIPES WILL NOT BE MEASURED AND PAID FOR BUT SHALL BE INCIDENTAL TO THE PROPOSED STORM DRAIN.
2. UNLESS OTHERWISE INDICATED ON THE PLANS, PROPOSED GRADES SHOULD BE RETURNED TO MATCH EXISTING CONDITIONS.
3. ALL EXISTING PAVEMENT REMOVED FOR INSTALLATION OF STORM DRAINS SHALL BE REPLACED IN ACCORDANCE WITH DETAIL ON DWG. NO. DE-02.
4. LIMITS OF PROPOSED ASPHALT CURB SHALL BE AS SHOWN ON PLANS (10' TYP. ON EITHER SIDE OF PROPOSED INLET) OR MATCH LIMITS OF EXISTING CURB WHERE EXISTING INLETS ARE TO BE REPLACED.

OWNER / DEVELOPER:

CARROLL COUNTY
DEPARTMENT OF LAND AND RESOURCE MANAGEMENT
BUREAU OF RESOURCE MANAGEMENT
225 N. CENTER ST
WESTMINSTER, MARYLAND 21157-5194
PHONE: 410.386.2668

LAND OWNERS:

RICHARD J. & MARY L. GULAS
5812 MIRIAM DRIVE - LOT 39
PARCEL: 0575 TAX MAP: 0073 GRID: 0004

JOHN S. & DEBORAH A. BOEHL
5814 MIRIAM DRIVE - LOT 40
PARCEL: 0576 TAX MAP: 0073 GRID: 0004

LYNN E. GRAHAM
5807 MIRIAM DRIVE - LOT 58
PARCEL: 0576 TAX MAP: 0073 GRID: 0004

ELAINE M. ROSS
5811 MIRIAM DRIVE - LOT 57
PARCEL: 0575 TAX MAP: 0073 GRID: 0004

MARY M. & KATHLEEN W. REYNOLDS
5830 MIRIAM DRIVE - LOT "PARCEL I"
PARCEL: 0575 TAX MAP: 0073 GRID: 0004

JEFFREY D. CREUTZER & KAREN M. HILNBRAND
1107 COURTLAND DRIVE - LOT 18A
PARCEL: 0575 TAX MAP: 0073 GRID: 0004

JOSEPH W. & LISA V. THORPE
1105 COURTLAND DRIVE - LOT 19A
PARCEL: 0575 TAX MAP: 0073 GRID: 0004

TIMOTHY & BRITTANY BECK
1103 COURTLAND DRIVE - LOT 20A
PARCEL: 0575 TAX MAP: 0073 GRID: 0004

WAYNE & LORI HOWES
1104 JOHNSVILLE ROAD - LOT 2A
PARCEL: 0575 TAX MAP: 0073 GRID: 0004

MARK L. & JILL E. MARCIANTE
1102 JOHNSVILLE ROAD - LOT 1A
PARCEL: 0575 TAX MAP: 0073 GRID: 0004

REVISIONS		
NO.	DATE	DESCRIPTION

CENTURY ENGINEERING
CONSULTING ENGINEERS - PLANNERS
10710 GILROY ROAD
HUNT VALLEY, MARYLAND 21031
PHONE: (443) 589-2400 FAX: (443) 589-2401

CARROLL COUNTY BRYNWOOD STORM DRAIN IMPROVEMENTS

FINAL DESIGN

TITLE:

DRAINAGE PLAN

COUNTY FILE NO: GRO-20-0009	SCALE: 1"=30'	DATE: 1/13/2023
SEAL:	DESIGN: AW	CHECK: TT
	DWG NO: DD-02 OF DD-02	
	SHEET NO: 05 OF 17	

STATE OF MARYLAND — THOMAS G. TURNER — NO. 16997 — REGISTERED PROFESSIONAL ENGINEER

I HEREBY CERTIFY THAT THESE DOCUMENTS WERE PREPARED OR APPROVED BY ME, AND THAT I AM A DULY LICENSED PROFESSIONAL ENGINEER UNDER THE LAWS OF THE STATE OF MARYLAND.

LICENSE #: 16997 EXPIRES: 7/15/2024

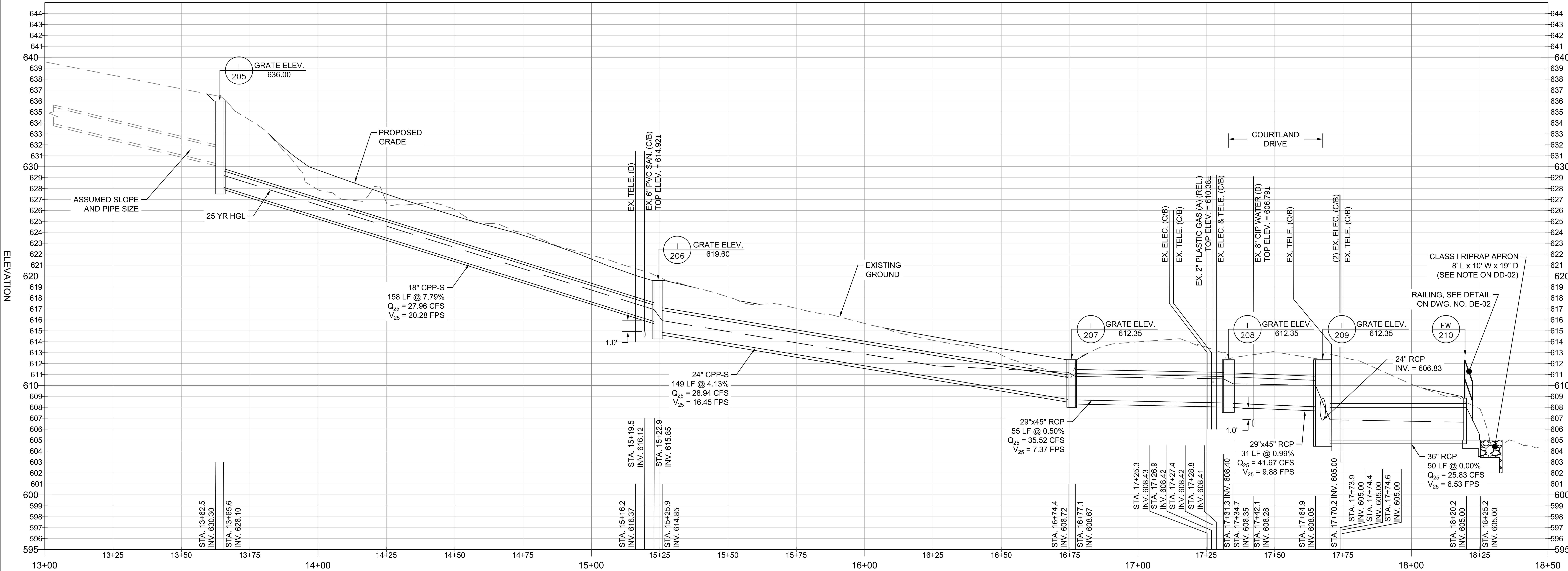

STORM DRAIN PROFILE (PR-MH-205 TO PR-EW-210)

HORIZONTAL SCALE: 1" = 20'

VERTICAL SCALE: 1" = 5'

NOTES:

1. SOURCES OF EXISTING UTILITY INFORMATION ARE AS FOLLOWS (SEE ADDITIONAL INFORMATION ON DWG. NO. UT-01 AND UT-02):
   (A) = UTILITY LOCATIONS AND ELEVATIONS TAKEN FROM TEST HOLES PERFORMED DURING DESIGN.
   (C/B) = UTILITY LOCATIONS TAKEN FROM SURVEY OF SURFACE UTILITY FEATURES AS WELL AS SURVEY OF MISS UTILITY MARKINGS. UTILITY ELEVATIONS UNKNOWN, INTERPOLATED FROM SURVEYED INVERTS AT MANHOLES, OR INTERPOLATED FROM DATUM-ADJUSTED RECORD DRAWINGS. CONTRACTOR SHALL VERIFY ELEVATIONS VIA SURVEY OR TEST HOLES PRIOR TO ORDERING STRUCTURES OR BEGINNING WORK.
   (D) = UTILITY LOCATION ASSUMED FROM RECORD DRAWINGS PROVIDED BY UTILITY OWNERS. UTILITY ELEVATIONS UNKNOWN. CONTRACTOR SHALL VERIFY LOCATIONS AND ELEVATIONS VIA TEST HOLES PRIOR TO ORDERING STRUCTURES OR BEGINNING WORK.
2. REL. = TO BE RELOCATED
3. REINFORCED CONCRETE PIPE (RCP) IS CLASS IV UNLESS NOTED OTHERWISE.

STORM DRAIN STRUCTURE SCHEDULE

ID	TYPE	STANDARD PLATE NO.	TOP ELEV.	INVERT IN/OUT	NORTHING	EASTING	COMMENTS
PR-I-101	PRECAST STD. SINGLE OPENING TYPE K INLET OPEN-END GRATE	MD 378.11	T.G. 594.00	INV. OUT 589.25	636295.34	1323528.81	WEIR ELEV. 593.33 V.D. = 2'
PR-I-102	MODIFIED PRECAST STD. TYPE K INLET OPEN-END GRATE	MD 378.11 (SEE NOTE 3)	T.G. 590.38	INV. IN 586.25 INV. OUT 585.50	636243.93	1323463.19	SEE NOTE 3 V.D. = 2'
PR-I-102A	PRECAST STD. TYPE S INLET DOUBLE GRATE TANDEM	MD 374.70	T.G. 587.25	INV. IN 583.00 INV. OUT 582.00	636262.76	1323359.79	V.D. = 2'
PR-I-103	PRECAST STD. TYPE S COMBINATION INLET DOUBLE GRATE TANDEM	MD 374.71	T.G. 584.43	INV. IN 580.15 / 580.50 INV. OUT 580.05	636268.76	1323334.94	V.D. = 1'
PR-I-104	PRECAST STD. TYPE S INLET DOUBLE GRATE TANDEM	MD 374.70	T.G. 587.71	INV. OUT 583.85	636339.05	1323367.08	V.D. = 1'
PR-MH-105	48" DIA. PRECAST MANHOLE FOR 12" TO 24" PIPES	MD 384.01	RIM 585.66	INV. IN 582.10 INV. OUT 580.70	636304.31	1323341.10	-
PR-I-106	STANDARD WRM INLET	MD 374.05	T.G. 584.39	INV. IN 579.75 / 579.02 INV. OUT 576.90	636280.92	1323302.20	V.D. = 4'
PR-MH-107	72" DIA. PRECAST MANHOLE FOR 42" & 48" PIPES	MD 384.05	RIM 584.50	INV. IN 576.49 INV. OUT 574.00	636293.13	1323283.54	V.D. = 3'
PR-I-108	72" DIA. PRECAST MANHOLE FOR 42" & 48" PIPES	MD 384.05 (SEE NOTE 4)	RIM 574.00	INV. IN 569.75 INV. OUT 565.27	636336.63	1323146.59	SEE NOTE 4 V.D. = 2'
PR-EW-109	STD. TYPE C ENDWALL FOR 42" RCP	MD 354.01	TOP 569.63	INV. OUT 565.13	636348.13	1323110.41	SEE NOTE 5
PR-I-205	MODIFIED PRECAST STD. TYPE K INLET OPEN-END GRATE	MD 378.11 (SEE NOTE 3)	T.G. 636.00	INV. IN 630.30 INV. OUT 628.10	636304.31	1323341.10	SEE NOTE 3 V.D. = 5'
PR-I-206	MODIFIED PRECAST STD. TYPE K INLET OPEN-END GRATE	MD 378.11 (SEE NOTE 3)	T.G. 619.60	INV. IN 615.85 INV. OUT 614.85	636280.92	1323802.20	SEE NOTE 3 V.D. = 2'
PR-I-207	PRECAST STD. TYPE S INLET DOUBLE GRATE TANDEM	MD 374.70	T.G. 612.35	INV. IN 608.72 INV. OUT 608.67	635514.02	1323769.88	V.D. = 1'
PR-I-208	PRECAST STD. TYPE S COMBINATION INLET DOUBLE GRATE TANDEM	MD 374.71	T.G. 612.35	INV. IN 608.40 INV. OUT 608.35	635547.31	1323724.58	V.D. = 1'
PR-I-209	STANDARD WRM INLET DIVERSION STRUCTURE	MD 374.05	T.G. 612.35	INV. IN 608.05 INV. OUT 606.83 / 605.00	635569.57	1323696.49	SEE DETAIL ON DWG. NO. DE-01
PR-EW-210	STD. TYPE G ENDWALL FOR 36" RCP	MD 360.01	-	INV. OUT 605.00	635601.39	1323654.82	SEE NOTE 5

T:\2020\TRANSPORTATION\171166.10 CARROLL CO BRYNWOOD STORM DRAIN IMPROVEMENTS\CADD\PR-0000_BRYNWOOD.DWG

NOTES:

1. LOCATIONS (NORTHING, EASTING) AND TOP ELEVATIONS OF STRUCTURES ARE MEASURED AS FOLLOWS:
   a. GRATE/COMBINATION INLETS ALONG CURB: CENTER OF INLET AT FACE OF CURB
   b. GRATE INLETS AWAY FROM CURB: CENTER OF INLET
   c. MANHOLES: CENTER OF BASE STRUCTURE
   d. ENDWALLS: CENTER OF STRUCTURE AT PIPE OUTLET
2. ABBREVIATIONS:
   a. T.G. = TOP OF GRATE
   b. V.D. = VERTICAL DEPTH PAYMENT
   c. CPP-S = CORRUGATED PLASTIC PIPE - SMOOTH INTERIOR
3. FOR PR-I-102, PR-I-205, AND PR-I-206, MODIFY STANDARD PLATE MD 378.11 SO THAT ALL FOUR WALLS ARE FULL HEIGHT STRUCTURAL 8" WALLS AS SHOWN IN SECTION C-C, THUS ELIMINATING THE WEIR OPENING SHOWN IN SECTION B-B. THESE INLETS WILL BE PAID FOR AS STANDARD SINGLE OPENING TYPE K INLETS.
4. FOR PR-I-108, MODIFY STANDARD PLATE MD 384.05 TO REPLACE THE STANDARD TYPE A MANHOLE FRAME & COVER WITH A GRATE-TYPE, REDUCED HEIGHT (4"±) FRAME & COVER, SUCH AS NEENAH FOUNDRY R-2556-A (TYPE G GRATE), R-2573-1 (TYPE C GRATE), R-2595-A (TYPE D GRATE), OR APPROVED EQUIVALENT. THE CHANGE IN MANHOLE FRAME & COVER WILL BE INCIDENTAL TO THE PROPOSED 72" DIA. PRECAST MANHOLE.
5. FOR PR-EW-210 AND PR-EW-109, PROVIDE A RAILING ALONG THE TOP AND WINGWALLS PER DETAIL ON DWG. NO. DE-02. THE RAILINGS SHALL BE INCIDENTAL TO THE RESPECTIVE ENDWALL ITEMS.

STORM DRAIN STRUCTURE SCHEDULE (CONTINUED)

ID	TYPE	STANDARD PLATE NO.	TOP ELEV.	INVERT IN/OUT	NORTHING	EASTING	COMMENTS
PR-I-301	PRECAST STD. SINGLE OPENING TYPE K INLET OPEN-END GRATE	MD 378.11	T.G. 616.17	INV. OUT 608.60	635617.94	1323810.91	WEIR ELEV. 615.50 V.D. = 5'
PR-MH-302	48" DIA. PRECAST MANHOLE FOR 12" TO 24" PIPES	MD 384.01	RIM 615.60	INV. IN 608.08 INV. OUT 607.88	635646.34	1323786.76	-
PR-MH-303	60" DIA. PRECAST MANHOLE FOR 27" TO 36" PIPES	MD 384.03	RIM 615.10	INV. IN 605.82 / 607.69 INV. OUT 605.62	635646.87	1323769.62	V.D. = 2'
PR-I-304	PRECAST STD. TYPE S INLET DOUBLE GRATE TANDEM	MD 374.70	T.G. 608.63	INV. OUT 602.25	635940.59	1323541.24	V.D. = 3'
PR-MH-305	60" DIA. PRECAST MANHOLE FOR 27" TO 36" PIPES	MD 384.03	RIM 608.95	INV. IN 602.62 / 601.96 INV. OUT 600.71	635930.52	1323529.39	V.D. = 1'
PR-MH-306	60" DIA. PRECAST MANHOLE FOR 27" TO 36" PIPES	MD 384.03	RIM 594.50	INV. IN 587.79 INV. OUT 587.07	636119.01	1323371.58	-
PR-MH-307	60" DIA. PRECAST MANHOLE FOR 27" TO 36" PIPES	MD 384.03	RIM 588.40	INV. IN 582.20 INV. OUT 581.55	636188.42	1323308.76	-

OWNER / DEVELOPER:

CARROLL COUNTY
DEPARTMENT OF LAND AND RESOURCE MANAGEMENT
BUREAU OF RESOURCE MANAGEMENT
225 N. CENTER ST
WESTMINSTER, MARYLAND 21157-5194
PHONE: 410.386.2668

LAND OWNERS:

RICHARD J. & MARY L. GULAS
5812 MIRIAM DRIVE - LOT 39
PARCEL: 0575 TAX MAP: 0073 GRID: 0004

JOHN S. & DEBORAH A. BOEHL
5814 MIRIAM DRIVE - LOT 40
PARCEL: 0576 TAX MAP: 0073 GRID: 0004

LYNN E. GRAHAM
5807 MIRIAM DRIVE - LOT 58
PARCEL: 0576 TAX MAP: 0073 GRID: 0004

ELAINE M. ROSS
5811 MIRIAM DRIVE - LOT 57
PARCEL: 0575 TAX MAP: 0073 GRID: 0004

MARY M. & KATHLEEN W. REYNOLDS
5830 MIRIAM DRIVE - LOT "PARCEL I"
PARCEL: 0575 TAX MAP: 0073 GRID: 0004

JEFFREY D. CREUTZER & KAREN M. HILNBRAND
1107 COURTLAND DRIVE - LOT 18A
PARCEL: 0575 TAX MAP: 0073 GRID: 0004

JOSEPH W. & LISA V. THORPE
1105 COURTLAND DRIVE - LOT 19A
PARCEL: 0575 TAX MAP: 0073 GRID: 0004

TIMOTHY & BRITTANY BECK
1103 COURTLAND DRIVE - LOT 20A
PARCEL: 0575 TAX MAP: 0073 GRID: 0004

WAYNE & LORI HOWES
1104 JOHNSVILLE ROAD - LOT 2A
PARCEL: 0575 TAX MAP: 0073 GRID: 0004

MARK L. & JILL E. MARCIANTE
1102 JOHNSVILLE ROAD - LOT 1A
PARCEL: 0575 TAX MAP: 0073 GRID: 0004

REVISIONS		
NO.	DATE	DESCRIPTION

CENTURY ENGINEERING
CONSULTING ENGINEERS - PLANNERS
10710 GILROY ROAD
HUNT VALLEY, MARYLAND 21031
PHONE: (443) 589-2400 FAX: (443) 589-2401

CARROLL COUNTY BRYNWOOD STORM DRAIN IMPROVEMENTS

FINAL DESIGN

TITLE:

DRAINAGE PROFILES

COUNTY FILE NO: GRO-20-0009
SCALE: 1"=20'
DATE: 1/13/2023
SEAL:
DESIGN: AW
CHECK: TT
DWG NO: PR-01 OF PR-04
SHEET NO: 06 OF 17

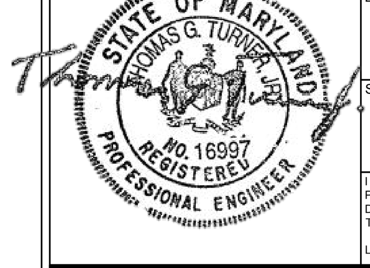

I HEREBY CERTIFY THAT THESE DOCUMENTS WERE PREPARED OR APPROVED BY ME, AND THAT I AM A DULY LICENSED PROFESSIONAL ENGINEER UNDER THE LAWS OF THE STATE OF MARYLAND.
LICENSE #: 16997 EXPIRES: 7/19/2024

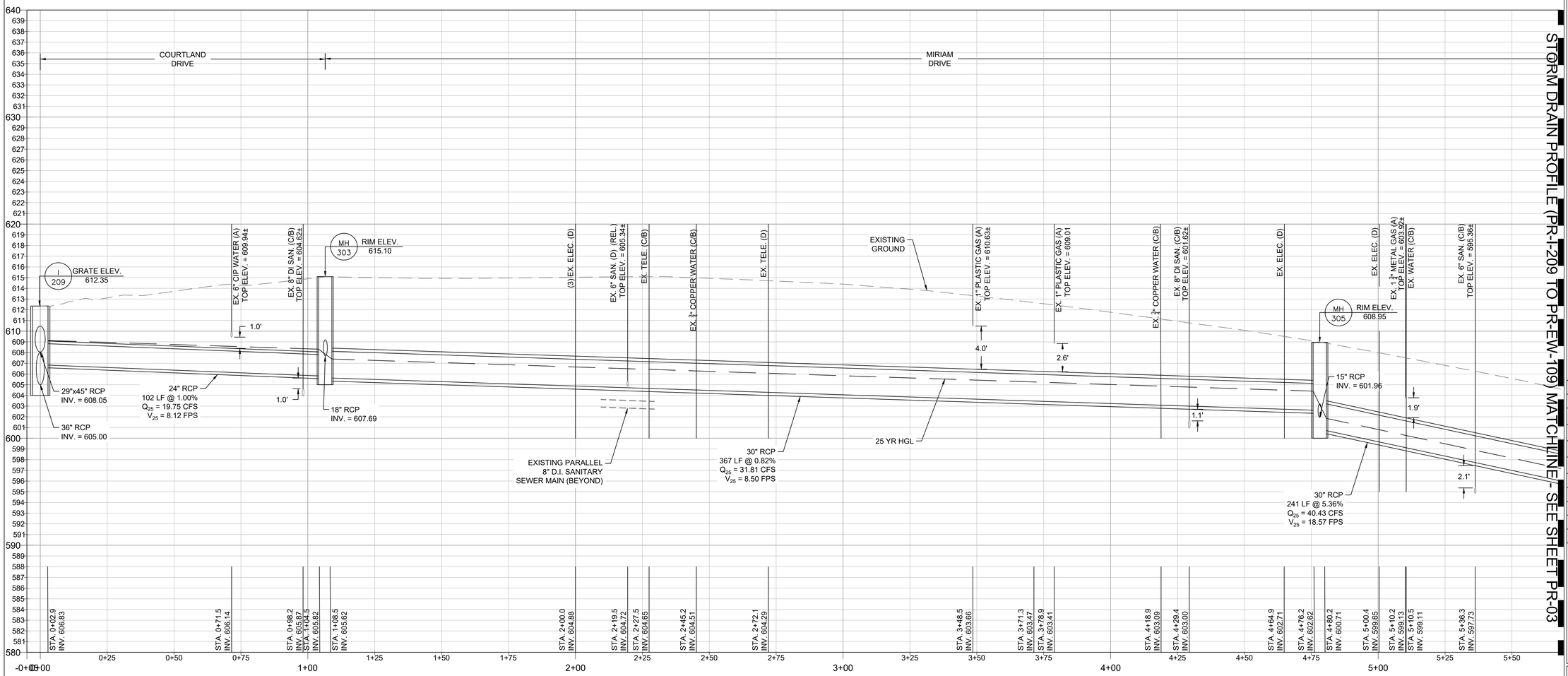

STORM DRAIN PROFILE (PR-I-209 TO PR-EW-109) MATCHLINE - SEE SHEET PR-03

STORM DRAIN PROFILE (PR-I-209 TO PR-EW-109)

HORIZONTAL SCALE: 1" = 20'
VERTICAL SCALE: 1" = 5'

NOTES:

1. SOURCES OF EXISTING UTILITY INFORMATION ARE AS FOLLOWS (SEE ADDITIONAL INFORMATION ON DWG. NO. UT-01 AND UT-02):
   (A) = UTILITY LOCATIONS AND ELEVATIONS TAKEN FROM TEST HOLES PERFORMED DURING DESIGN.
   (C/B) = UTILITY LOCATIONS TAKEN FROM SURVEY OF SURFACE UTILITY FEATURES AS WELL AS SURVEY OF MISS UTILITY MARKINGS. UTILITY ELEVATIONS UNKNOWN, INTERPOLATED FROM SURVEYED INVERTS AT MANHOLES, OR INTERPOLATED FROM DATUM-ADJUSTED RECORD DRAWINGS. CONTRACTOR SHALL VERIFY ELEVATIONS VIA SURVEY OR TEST HOLES PRIOR TO ORDERING STRUCTURES OR BEGINNING WORK.
   (D) = UTILITY LOCATION ASSUMED FROM RECORD DRAWINGS PROVIDED BY UTILITY OWNERS. UTILITY ELEVATIONS UNKNOWN. CONTRACTOR SHALL VERIFY LOCATIONS AND ELEVATIONS VIA TEST HOLES PRIOR TO ORDERING STRUCTURES OR BEGINNING WORK.
2. REL. = TO BE RELOCATED
3. REINFORCED CONCRETE PIPE (RCP) IS CLASS IV UNLESS NOTED OTHERWISE.

OWNER / DEVELOPER:

CARROLL COUNTY
DEPARTMENT OF LAND AND RESOURCE MANAGEMENT
BUREAU OF RESOURCE MANAGEMENT
225 N. CENTER ST
WESTMINSTER, MARYLAND 21157-5194
PHONE: 410.386.2668

LAND OWNERS:

RICHARD J. & MARY L. GULAS
5812 MIRIAM DRIVE - LOT 39
PARCEL: 0575 TAX MAP: 0073 GRID: 0004

JOHN S. & DEBORAH A. BOEHL
5814 MIRIAM DRIVE - LOT 40
PARCEL: 0576 TAX MAP: 0073 GRID: 0004

LYNN E. GRAHAM
5807 MIRIAM DRIVE - LOT 58
PARCEL: 0576 TAX MAP: 0073 GRID: 0004

ELAINE M. ROSS
5811 MIRIAM DRIVE - LOT 57
PARCEL: 0575 TAX MAP: 0073 GRID: 0004

MARY M. & KATHLEEN W. REYNOLDS
5830 MIRIAM DRIVE - LOT "PARCEL I"
PARCEL: 0575 TAX MAP: 0073 GRID: 0004

JEFFREY D. CREUTZER & KAREN M. HILNBRAND
1107 COURTLAND DRIVE - LOT 18A
PARCEL: 0575 TAX MAP: 0073 GRID: 0004

JOSEPH W. & LISA V. THORPE
1105 COURTLAND DRIVE - LOT 19A
PARCEL: 0575 TAX MAP: 0073 GRID: 0004

TIMOTHY & BRITTANY BECK
1103 COURTLAND DRIVE - LOT 20A
PARCEL: 0575 TAX MAP: 0073 GRID: 0004

WAYNE & LORI HOWES
1104 JOHNSVILLE ROAD - LOT 2A
PARCEL: 0575 TAX MAP: 0073 GRID: 0004

MARK L. & JILL E. MARCIANTE
1102 JOHNSVILLE ROAD - LOT 1A
PARCEL: 0575 TAX MAP: 0073 GRID: 0004

REVISIONS		
NO.	DATE	DESCRIPTION

CENTURY ENGINEERING
CONSULTING ENGINEERS - PLANNERS
10710 GILROY ROAD
HUNT VALLEY, MARYLAND 21031
PHONE: (443) 589-2400 FAX: (443) 589-2401

CARROLL COUNTY BRYNWOOD STORM DRAIN IMPROVEMENTS

FINAL DESIGN

TITLE:

DRAINAGE PROFILES

COUNTY FILE NO: GRO-20-0009	SCALE: 1"=20'	DATE: 1/13/2023
SEAL:	DESIGN: AW	CHECK: TT
	DWG NO: PR-02 OF PR-04	
	SHEET NO: 07 OF 17	

STATE OF MARYLAND · THOMAS G. TURNER · No. 16997 · REGISTERED PROFESSIONAL ENGINEER

I HEREBY CERTIFY THAT THESE DOCUMENTS WERE PREPARED OR APPROVED BY ME, AND THAT I AM A DULY LICENSED PROFESSIONAL ENGINEER UNDER THE LAWS OF THE STATE OF MARYLAND.

LICENSE #: 16997 EXPIRES: 7/19/2024

T:\2020\TRANSPORT\ATXDWT\186.10 CARROLL CO BRYWWOOD STORM DRAIN IMPRO\SHEETS\CAD\PR-0300_BRYWWOOD.DWG

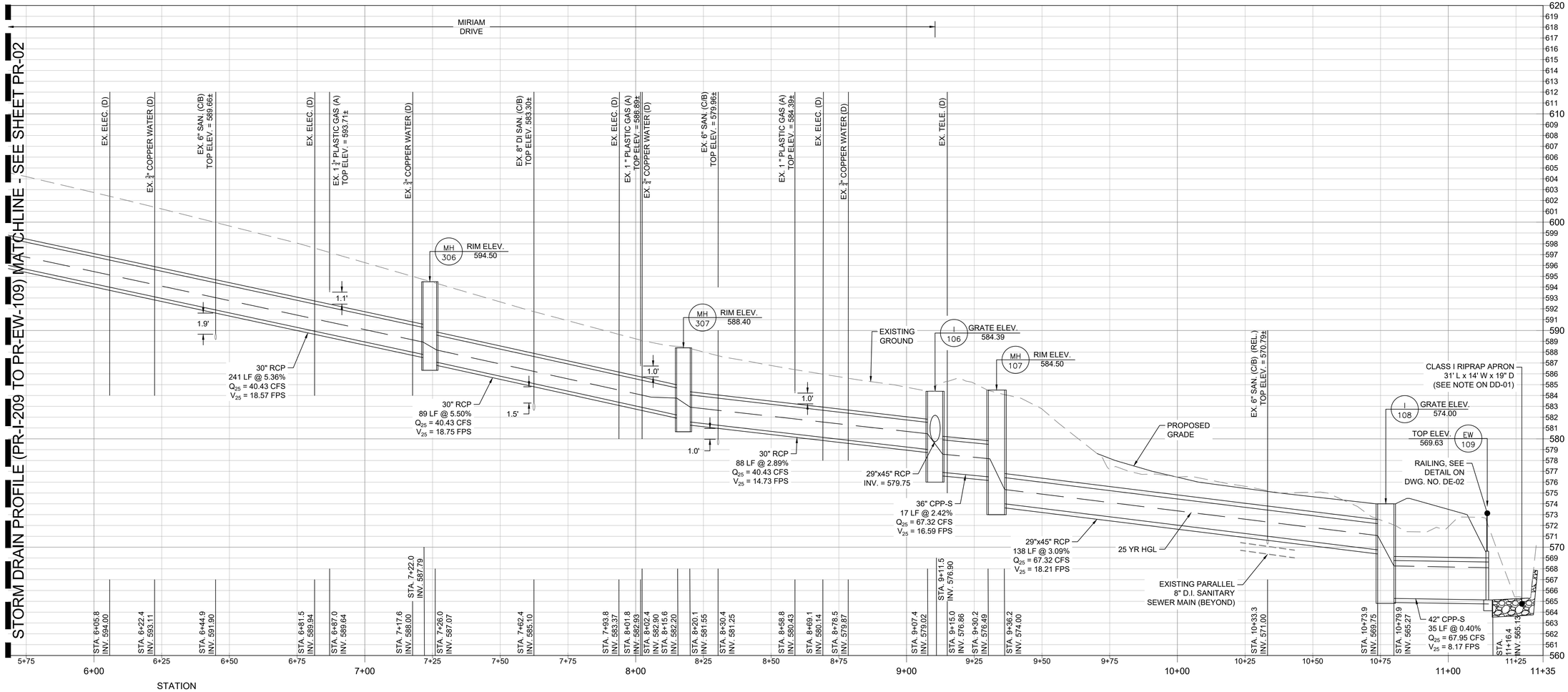

STORM DRAIN PROFILE (PR-I-209 TO PR-EW-109)

HORIZONTAL SCALE: 1" = 20'
VERTICAL SCALE: 1" = 5'

NOTES:

1. SOURCES OF EXISTING UTILITY INFORMATION ARE AS FOLLOWS (SEE ADDITIONAL INFORMATION ON DWG. NO. UT-01 AND UT-02):
   (A) = UTILITY LOCATIONS AND ELEVATIONS TAKEN FROM TEST HOLES PERFORMED DURING DESIGN.
   (C/B) = UTILITY LOCATIONS TAKEN FROM SURVEY OF SURFACE UTILITY FEATURES AS WELL AS SURVEY OF MISS UTILITY MARKINGS. UTILITY ELEVATIONS UNKNOWN, INTERPOLATED FROM SURVEYED INVERTS AT MANHOLES, OR INTERPOLATED FROM DATUM-ADJUSTED RECORD DRAWINGS. CONTRACTOR SHALL VERIFY ELEVATIONS VIA SURVEY OR TEST HOLES PRIOR TO ORDERING STRUCTURES OR BEGINNING WORK.
   (D) = UTILITY LOCATION ASSUMED FROM RECORD DRAWINGS PROVIDED BY UTILITY OWNERS. UTILITY ELEVATIONS UNKNOWN. CONTRACTOR SHALL VERIFY LOCATIONS AND ELEVATIONS VIA TEST HOLES PRIOR TO ORDERING STRUCTURES OR BEGINNING WORK.
2. REL. = TO BE RELOCATED
3. REINFORCED CONCRETE PIPE (RCP) IS CLASS IV UNLESS NOTED OTHERWISE.

OWNER / DEVELOPER:

CARROLL COUNTY
DEPARTMENT OF LAND AND RESOURCE MANAGEMENT
BUREAU OF RESOURCE MANAGEMENT
225 N. CENTER ST
WESTMINSTER, MARYLAND 21157-5194
PHONE: 410.386.2668

LAND OWNERS:

RICHARD J. & MARY L. GULAS
5812 MIRIAM DRIVE - LOT 39
PARCEL: 0575 TAX MAP: 0073 GRID: 0004

JOHN S. & DEBORAH A. BOEHL
5814 MIRIAM DRIVE - LOT 40
PARCEL: 0576 TAX MAP: 0073 GRID: 0004

LYNN E. GRAHAM
5807 MIRIAM DRIVE - LOT 58
PARCEL: 0576 TAX MAP: 0073 GRID: 0004

ELAINE M. ROSS
5811 MIRIAM DRIVE - LOT 57
PARCEL: 0575 TAX MAP: 0073 GRID: 0004

MARY M. & KATHLEEN W. REYNOLDS
5830 MIRIAM DRIVE - LOT "PARCEL I"
PARCEL: 0575 TAX MAP: 0073 GRID: 0004

JEFFREY D. CREUTZER & KAREN M. HILNBRAND
1107 COURTLAND DRIVE - LOT 18A
PARCEL: 0575 TAX MAP: 0073 GRID: 0004

JOSEPH W. & LISA V. THORPE
1105 COURTLAND DRIVE - LOT 19A
PARCEL: 0575 TAX MAP: 0073 GRID: 0004

TIMOTHY & BRITTANY BECK
1103 COURTLAND DRIVE - LOT 20A
PARCEL: 0575 TAX MAP: 0073 GRID: 0004

WAYNE & LORI HOWES
1104 JOHNSVILLE ROAD - LOT 2A
PARCEL: 0575 TAX MAP: 0073 GRID: 0004

MARK L. & JILL E. MARCIANTE
1102 JOHNSVILLE ROAD - LOT 1A
PARCEL: 0575 TAX MAP: 0073 GRID: 0004

REVISIONS		
NO.	DATE	DESCRIPTION

CENTURY ENGINEERING
CONSULTING ENGINEERS - PLANNERS
10710 GILROY ROAD
HUNT VALLEY, MARYLAND 21031
PHONE: (443) 589-2400 FAX: (443) 589-2401

CARROLL COUNTY BRYNWOOD STORM DRAIN IMPROVEMENTS

FINAL DESIGN

TITLE:

DRAINAGE PROFILES

COUNTY FILE NO: GRO-20-0009	SCALE: 1"=20'	DATE: 1/13/2023
SEAL:	DESIGN: AW	CHECK: TT
	DWG NO: PR-03 OF PR-04	
	SHEET NO: 08 OF 17	

STATE OF MARYLAND THOMAS G. TURNER NO. 16997 REGISTERED PROFESSIONAL ENGINEER

I HEREBY CERTIFY THAT THESE DOCUMENTS WERE PREPARED OR APPROVED BY ME, AND THAT I AM A DULY LICENSED PROFESSIONAL ENGINEER UNDER THE LAWS OF THE STATE OF MARYLAND.

LICENSE #: 16997 EXPIRES: 7/19/2024

T:\2020\TRANSPORTATION\171166.10 CARROLL CO BRYNWOOD STORM DRAIN IMPROVEMENTS\CADD\PR-0300_BRYNWOOD.DWG

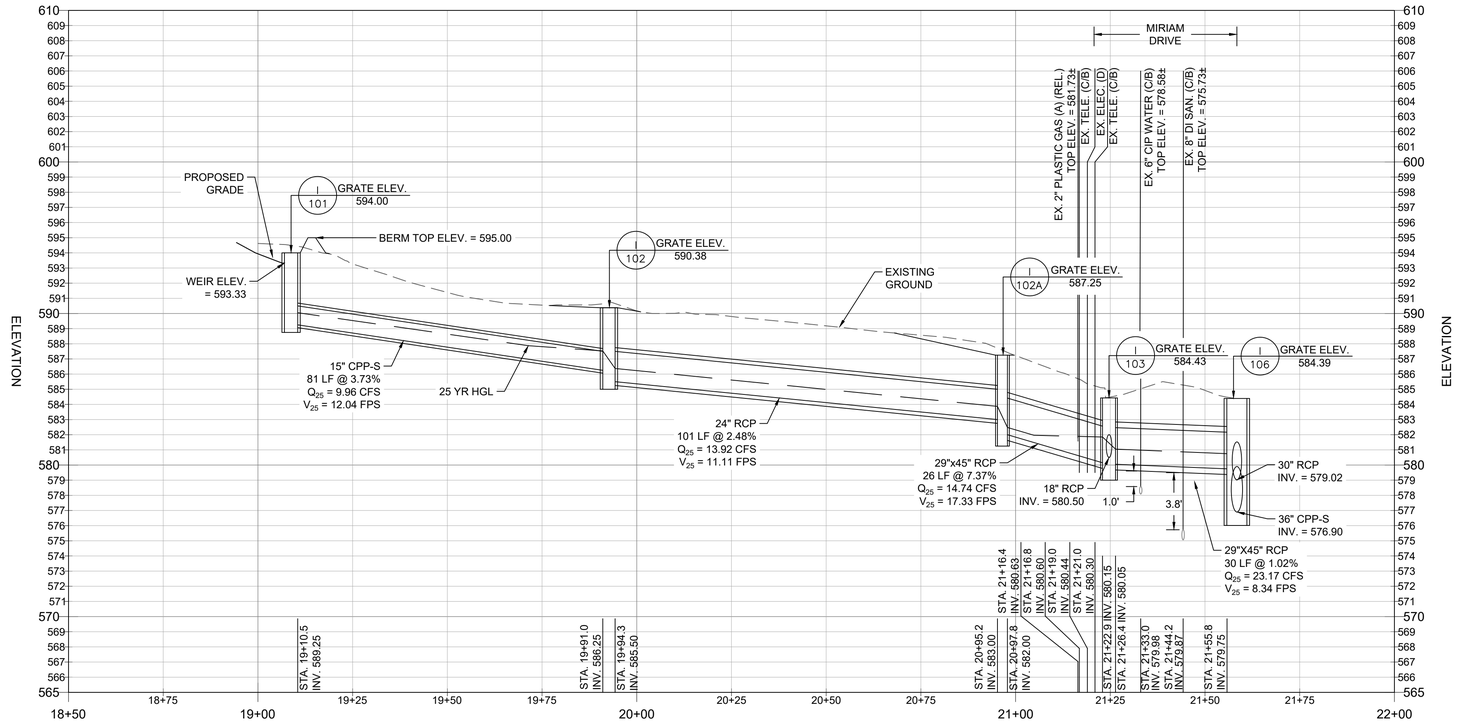

STORM DRAIN PROFILE (PR-I-101 TO PR-I-106)

HORIZONTAL SCALE: 1" = 20'

VERTICAL SCALE: 1" = 5'

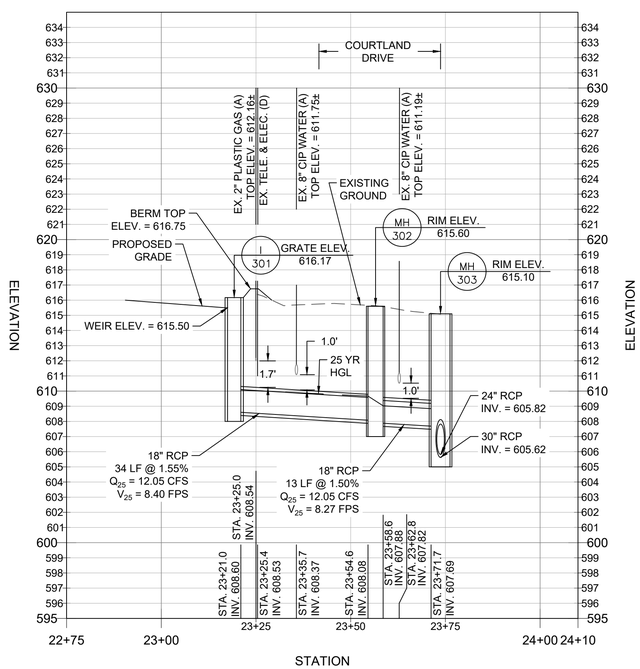

STORM DRAIN PROFILE (PR-I-301 TO PR-MH-303)

HORIZONTAL SCALE: 1" = 20'

VERTICAL SCALE: 1" = 5'

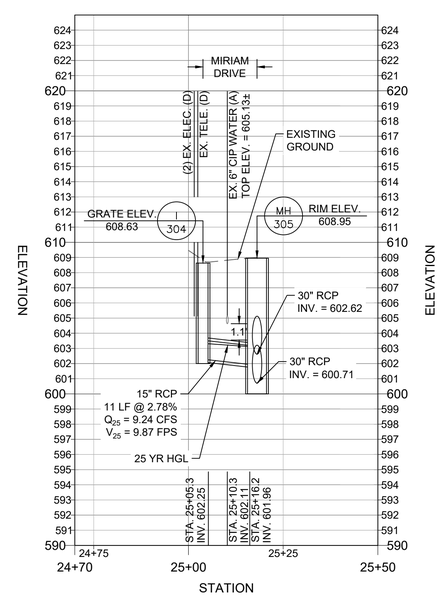

STORM DRAIN PROFILE (PR-I-304 TO PR-MH-305)

HORIZONTAL SCALE: 1" = 20'

VERTICAL SCALE: 1" = 5'

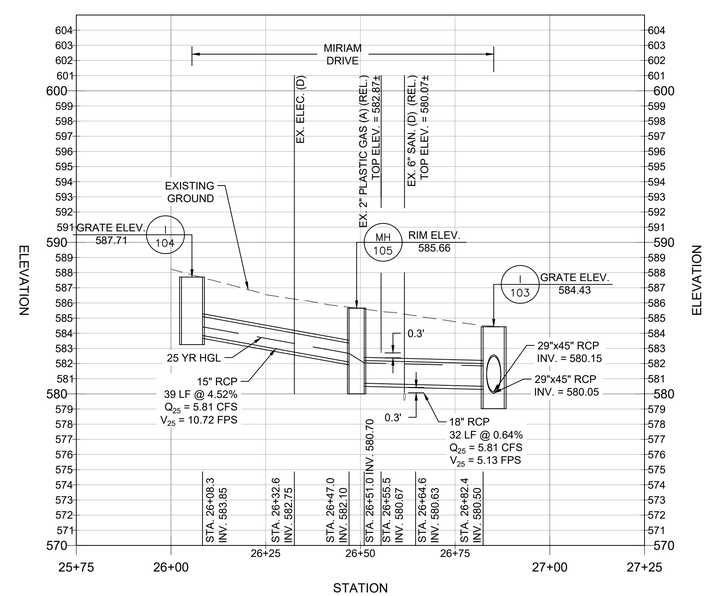

STORM DRAIN PROFILE (PR-I-104 TO PR-I-103)

HORIZONTAL SCALE: 1" = 20'

VERTICAL SCALE: 1" = 5'

NOTES:

1. SOURCES OF EXISTING UTILITY INFORMATION ARE AS FOLLOWS (SEE ADDITIONAL INFORMATION ON DWG. NO. UT-01 AND UT-02):
   (A) = UTILITY LOCATIONS AND ELEVATIONS TAKEN FROM TEST HOLES PERFORMED DURING DESIGN.
   (C/B) = UTILITY LOCATIONS TAKEN FROM SURVEY OF SURFACE UTILITY FEATURES AS WELL AS SURVEY OF MISS UTILITY MARKINGS. UTILITY ELEVATIONS UNKNOWN, INTERPOLATED FROM SURVEYED INVERTS AT MANHOLES, OR INTERPOLATED FROM DATUM-ADJUSTED RECORD DRAWINGS. CONTRACTOR SHALL VERIFY ELEVATIONS VIA SURVEY OR TEST HOLES PRIOR TO ORDERING STRUCTURES OR BEGINNING WORK.
   (D) = UTILITY LOCATION ASSUMED FROM RECORD DRAWINGS PROVIDED BY UTILITY OWNERS. UTILITY ELEVATIONS UNKNOWN. CONTRACTOR SHALL VERIFY LOCATIONS AND ELEVATIONS VIA TEST HOLES PRIOR TO ORDERING STRUCTURES OR BEGINNING WORK.
2. REL. = TO BE RELOCATED
3. REINFORCED CONCRETE PIPE IS CLASS IV UNLESS NOTED OTHERWISE.

OWNER / DEVELOPER:

CARROLL COUNTY
DEPARTMENT OF LAND AND RESOURCE MANAGEMENT
BUREAU OF RESOURCE MANAGEMENT
225 N. CENTER ST
WESTMINSTER, MARYLAND 21157-5194
PHONE: 410.386.2668

LAND OWNERS:

RICHARD J. & MARY L. GULAS
5812 MIRIAM DRIVE - LOT 39
PARCEL: 0575 TAX MAP: 0073 GRID: 0004

JOHN S. & DEBORAH A. BOEHL
5814 MIRIAM DRIVE - LOT 40
PARCEL: 0576 TAX MAP: 0073 GRID: 0004

LYNN E. GRAHAM
5807 MIRIAM DRIVE - LOT 58
PARCEL: 0576 TAX MAP: 0073 GRID: 0004

ELAINE M. ROSS
5811 MIRIAM DRIVE - LOT 57
PARCEL: 0575 TAX MAP: 0073 GRID: 0004

MARY M. & KATHLEEN W. REYNOLDS
5830 MIRIAM DRIVE - LOT "PARCEL I"
PARCEL: 0575 TAX MAP: 0073 GRID: 0004

JEFFREY D. CREUTZER & KAREN M. HILNBRAND
1107 COURTLAND DRIVE - LOT 18A
PARCEL: 0575 TAX MAP: 0073 GRID: 0004

JOSEPH W. & LISA V. THORPE
1105 COURTLAND DRIVE - LOT 19A
PARCEL: 0575 TAX MAP: 0073 GRID: 0004

TIMOTHY & BRITTANY BECK
1103 COURTLAND DRIVE - LOT 20A
PARCEL: 0575 TAX MAP: 0073 GRID: 0004

WAYNE & LORI HOWES
1104 JOHNSVILLE ROAD - LOT 2A
PARCEL: 0575 TAX MAP: 0073 GRID: 0004

MARK L. & JILL E. MARCIANTE
1102 JOHNSVILLE ROAD - LOT 1A
PARCEL: 0575 TAX MAP: 0073 GRID: 0004

REVISIONS		
NO.	DATE	DESCRIPTION

CENTURY ENGINEERING
CONSULTING ENGINEERS - PLANNERS
10710 GILROY ROAD
HUNT VALLEY, MARYLAND 21031
PHONE: (443) 589-2400 FAX: (443) 589-2401

CARROLL COUNTY BRYNWOOD STORM DRAIN IMPROVEMENTS

FINAL DESIGN

TITLE:

DRAINAGE PROFILES

COUNTY FILE NO: GRO-20-0009	SCALE: 1"=20'	DATE: 1/13/2023
SEAL:	DESIGN: AW	CHECK: TT
	DWG NO: PR-04 OF PR-04	
	SHEET NO: 09 OF 17	

STATE OF MARYLAND · THOMAS G. TURNER · No. 16997 · REGISTERED PROFESSIONAL ENGINEER

I HEREBY CERTIFY THAT THESE DOCUMENTS WERE PREPARED OR APPROVED BY ME, AND THAT I AM A DULY LICENSED PROFESSIONAL ENGINEER UNDER THE LAWS OF THE STATE OF MARYLAND.

LICENSE #: 16997 EXPIRES: 7/19/2024

T:\2020\170\REPORTS\170\170.16 CARROLL CO DPW\WOOD ST DRAINAGE IMPROVEMENTS\CAD\PR-0400_BRYNWOOD.DWG

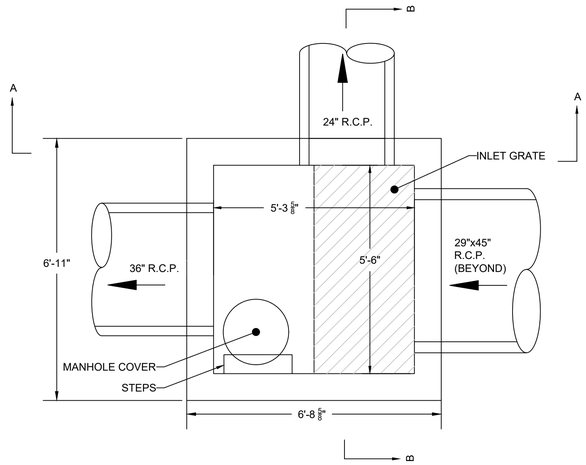

TOP VIEW
PR-I-209
SCALE: 1/2" = 1'

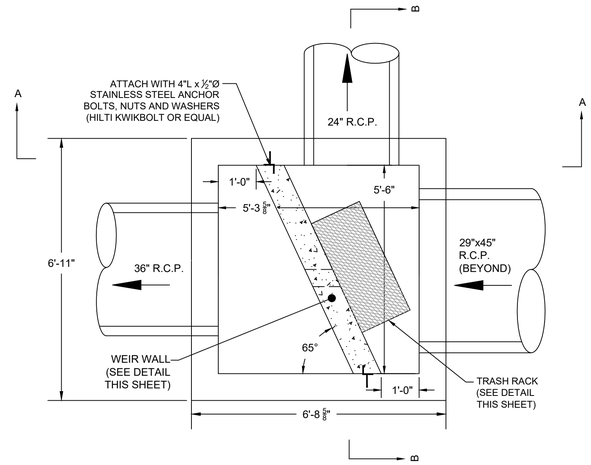

PLAN VIEW
PR-I-209
SCALE: 1/2" = 1'

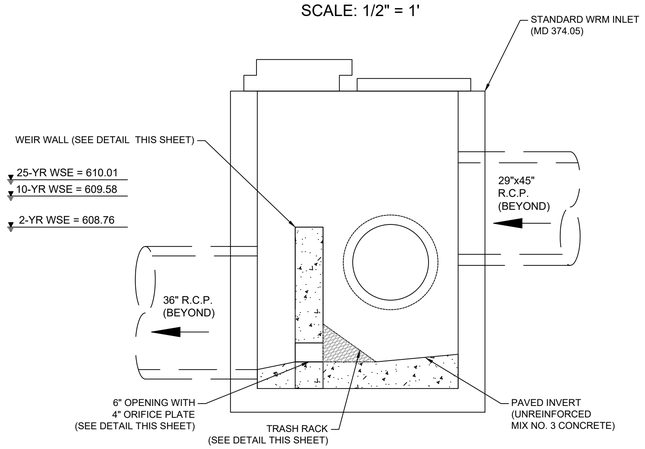

SECTION A-A
PR-I-209
SCALE: ½" = 1'

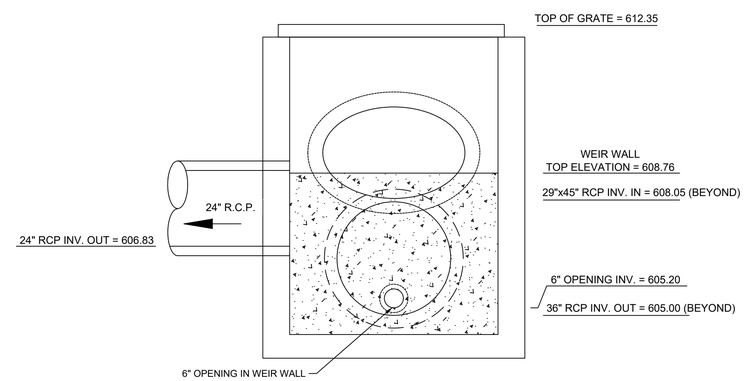

SECTION B-B
PR-I-209
SCALE: ½" = 1'

PR-I-209 DIVERSION STRUCTURE DETAIL

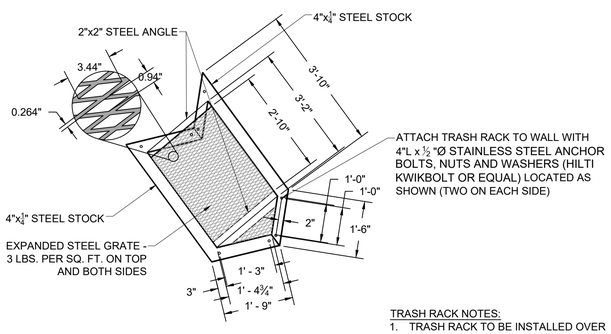

TRASH RACK DETAIL
(N.T.S.)

TRASH RACK NOTES:
1. TRASH RACK TO BE INSTALLED OVER ORIFICE OPENING IN WEIR WALL.
2. STEEL SHALL CONFORM TO ASTM A-36.
3. ALL SURFACES SHALL BE HOT-DIPPED GALVANIZED AFTER FABRICATION.

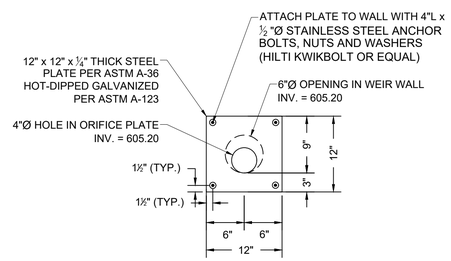

ORIFICE PLATE DETAIL
SCALE: 1" = 1'

ORIFICE PLATE NOTES:
1. PROVIDE SILICONE CAULK BEAD AROUND EDGES OF ORIFICE PLATE.
2. DO NOT USE GROUT ON ORIFICE PLATE.
3. ALIGN ORIFICE PLATE INVERT WITH INVERT OF 6" OPENING IN WEIR WALL.

WEIR WALL NOTES:
1. ALL CONCRETE SHALL BY MIX NO. 3 (3500 PSI).
2. ALL REINFORCING AND DIMENSIONS SHALL BE AS SHOWN. REINFORCING STEEL SHALL CONFORM TO ASTM A 615, GRADE 60. MINIMIUM COVER FOR ANY BAR SHALL BE 2" UNLESS OTHERWISE NOTED.
3. PROVIDE HYDROPHILIC EXPANSIVE WATERSTOP AT ALL INTERFACE OF WEIR WALL TO STANDARD WRM INLET.

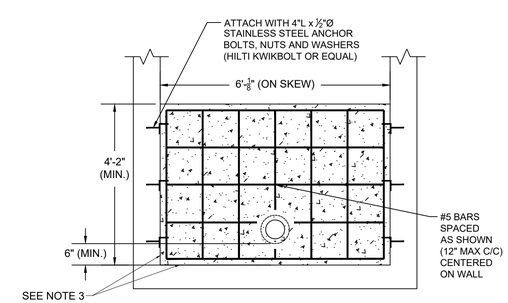

FRONT VIEW
SCALE: ½" = 1'

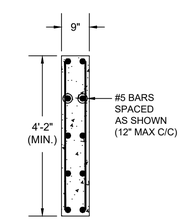

SIDE VIEW
SCALE: ½" = 1'

WEIR WALL REINFORCEMENT DETAIL

GENERAL NOTES:

1. ALL WORK SHALL CONFORM TO THE MDOT SHA "STANDARD SPECIFICATIONS FOR CONSTRUCTION AND MATERIALS", DATED JULY 2022, AND ALL REVISIONS THEREOF AND ADDITIONS THERETO; SPECIAL PROVISIONS FOR MATERIALS AND CONSTRUCTION; AND MDOT SHA'S "BOOK OF STANDARDS - HIGHWAY AND INCIDENTAL STRUCTURES".
2. STRUCTURE PR-I-209 SHALL BE A STANDARD WRM INLET (STANDARD NO. MD 374.05) MODIFIED TO ADD THE WEIR WALL AND ASSOCIATED FEATURES AS DETAILED THIS SHEET. REFER TO MD 374.05 FOR STANDARD WRM INLET STRUCTURE DETAIL AND REINFORCEMENT.
3. SHOP DRAWINGS MUST BE APPROVED PRIOR TO FABRICATION.
4. STRUCTURE PR-I-209 SHALL BE SHALL BE MEASURED AND PAID FOR AT THE CONTRACT UNIT PRICE PER LUMP SUM FOR PR-I-209 DIVERSION STRUCTURE. THE PAYMENT WILL BE FULL COMPENSATION FOR ALL EXCAVATION, CONCRETE, MASONRY, SPECIAL OR PRECAST UNITS, REINFORCEMENT, LADDER RUNGS, DRIP STONES, NO. 57 AGGREGATE, UNDERDRAIN STUBS, FRAMES, GRATES AND COVERS, GRADE AND SLOPE ADJUSTMENTS, BACKFILL, STANDARD MINIMUM DEPTH AND EXCESS VERTICAL DEPTH, ANCHOR BOLTS, WEIR WALL, TRASH RACK, ORIFICE PLATE, WATERSTOP, AND FOR ALL MATERIAL, LABOR, EQUIPMENT, TOOLS, AND INCIDENTALS NECESSARY TO COMPLETE THE WORK.

OWNER / DEVELOPER:

CARROLL COUNTY
DEPARTMENT OF LAND AND RESOURCE MANAGEMENT
BUREAU OF RESOURCE MANAGEMENT
225 N. CENTER ST
WESTMINSTER, MARYLAND 21157-5194
PHONE: 410.386.2668

LAND OWNERS:

RICHARD J. & MARY L. GULAS
5812 MIRIAM DRIVE - LOT 39
PARCEL: 0575 TAX MAP: 0073 GRID: 0004

JOHN S. & DEBORAH A. BOEHL
5814 MIRIAM DRIVE - LOT 40
PARCEL: 0576 TAX MAP: 0073 GRID: 0004

LYNN E. GRAHAM
5807 MIRIAM DRIVE - LOT 58
PARCEL: 0576 TAX MAP: 0073 GRID: 0004

ELAINE M. ROSS
5811 MIRIAM DRIVE - LOT 57
PARCEL: 0575 TAX MAP: 0073 GRID: 0004

MARY M. & KATHLEEN W. REYNOLDS
5830 MIRIAM DRIVE - LOT "PARCEL I"
PARCEL: 0575 TAX MAP: 0073 GRID: 0004

JEFFREY D. CREUTZER & KAREN M. HILNBRAND
1107 COURTLAND DRIVE - LOT 18A
PARCEL: 0575 TAX MAP: 0073 GRID: 0004

JOSEPH W. & LISA V. THORPE
1105 COURTLAND DRIVE - LOT 19A
PARCEL: 0575 TAX MAP: 0073 GRID: 0004

TIMOTHY & BRITTANY BECK
1103 COURTLAND DRIVE - LOT 20A
PARCEL: 0575 TAX MAP: 0073 GRID: 0004

WAYNE & LORI HOWES
1104 JOHNSVILLE ROAD - LOT 2A
PARCEL: 0575 TAX MAP: 0073 GRID: 0004

MARK L. & JILL E. MARCIANTE
1102 JOHNSVILLE ROAD - LOT 1A
PARCEL: 0575 TAX MAP: 0073 GRID: 0004

REVISIONS		
NO.	DATE	DESCRIPTION

CENTURY ENGINEERING
CONSULTING ENGINEERS - PLANNERS
10710 GILROY ROAD
HUNT VALLEY, MARYLAND 21031
PHONE: (443) 589-2400 FAX: (443) 589-2401

CARROLL COUNTY BRYNWOOD STORM DRAIN IMPROVEMENTS

FINAL DESIGN

TITLE:

DRAINAGE DETAILS

COUNTY FILE NO:	SCALE:	DATE:
GRO-20-0009	AS SHOWN	1/13/2023
SEAL:	DESIGN: AW	CHECK: TT
	DWG NO: DE-01 OF DE-02	
	SHEET NO: 10 OF 17	

STATE OF MARYLAND — THOMAS G. TURNER — No. 16997 — REGISTERED PROFESSIONAL ENGINEER

I HEREBY CERTIFY THAT THESE DOCUMENTS WERE PREPARED OR APPROVED BY ME, AND THAT I AM A DULY LICENSED PROFESSIONAL ENGINEER UNDER THE LAWS OF THE STATE OF MARYLAND.

LICENSE #: 16997 EXPIRES: 7/19/2024

T:\2020\TRANSPORTATION\171166.10 CARROLL CO BRYNWOOD STORM DRAIN IMPROVEMENTS\CAD\PR-DE-0000_BRYNWOOD.DWG

CARROLL COUNTY FIELD WELDED PIPE RAILING FOR HEADWALLS, END WALLS & RISER BOXES USED IN STORMWATER MANAGEMENT FACILITIES WITH VEHICLE ACCESS AND LOW VOLUMES OF FOOT TRAFFIC ANTICIPATED

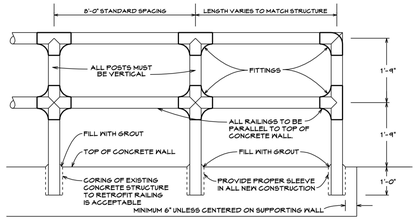

General Notes for Field Welded Pipe Railings

MATERIAL - Pipe Posts, Railing & Welded Fittings to be Standard Steel Pipe, 2 1/2" ϕ inside diameter. ASTM A-53, Schedule 40. Grout to be a commercially prepared 5,000 psi nonshrink product per section 402.1.1 (c)

JOINTS - No Pipe Joints are allowed except at corners or tees. Corners and tees may be formed by field cutting and welding or use of standard fittings. If field formed they must approximate the fitting geometry.

WELDING - Full penetration of metal. Welds to be free of holes, gaps or defects and ground off smooth to the touch. All welding to be in accordance with section 490.03.14.

PAINT - 1 Primer coat & 2 Paint Coats (Flat Black) in accordance with section 435

PRIORITY - All material & workmanship to conform to: the plans, then this detail, then the latest SHA Specifications

STANDARD BOOK - Current State of MD, SHA Book of Standards

SPECIFICATIONS - MD D.O.T. - Standard Specifications for Construction and Materials, July 2008

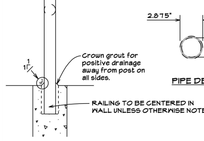

PIPE DETAIL

FIRST DISTRIBUTED FOR COMMENT AT THE C.C.SURVEYOR'S MEETING: NOV. 14, 2008. REVISED TO CORRECT SPECIFICATIONS DISTRIBUTED FOR COMMENT MAY 3, 2010
COMMENTS RECIEVED AT C.C. SURVEYORS MTG. MAY 14, 2010
EFFECTIVE DATE: JULY 29, 2010

420

STONE BEDDING DETAIL FOR NEW STRUCTURES WITHIN EXISTING PAVING FOR STORMWATER MANAGEMENT RETROFIT PROJECTS

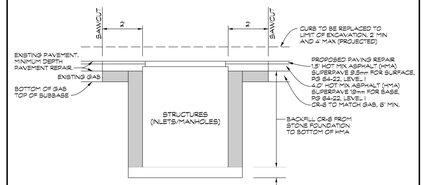

NO. 57 STONE BEDDING DETAIL FOR PIPE CONSTRUCTION (ALL SURFACES)

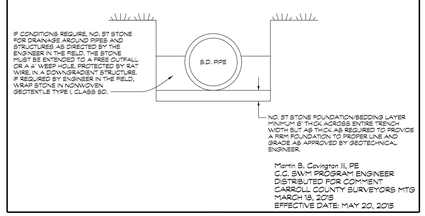

Martin B. Covington II, PE
C.C. SWM PROGRAM ENGINEER
DISTRIBUTED FOR COMMENT
CARROLL COUNTY SURVEYORS MTG
MARCH 18, 2015
EFFECTIVE DATE: MAY 20, 2015

127

b-4/27/2015-3:12:08 PM-G:\CLS\CC_SWM_Details\details(V8).dgn--Default

MODIFIED METHOD OF CUTTING AND REPAIRING ROADWAYS FOR STORMWATER MANAGEMENT RETRO-FIT PROJECTS

BASED ON C.C.D.P.W. ROADS AND STORM DRAINS MANUAL PLATE 47

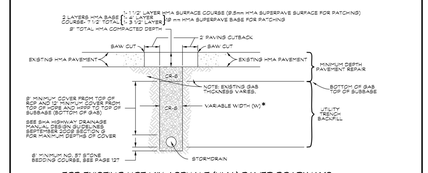

FOR EXISTING HOT MIX ASPHALT (HMA) PAVED ROADWAYS

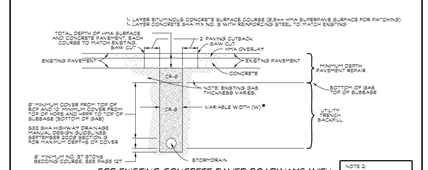

FOR EXISTING CONCRETE PAVED ROADWAYS WITH HOT MIX ASPHALT (HMA) OVERLAYS

NOTE 3:
ABOVE A 42" PIPE, A 6" BURIED DEPRESSION MUST BE CONTINUED THE FULL WIDTH OF THE PIPE TO A DEPTH OF 24" SEE 303.03.02.

NOTE 1: CUTTING & REMOVING PAVEMENT, STONE & SOIL REMOVAL AND REGIONAL CR-6 AND EMBANKMENT BLOCK BACKFILL AND PAVEMENT PATCH ARE ALL INCLUDED IN JURIS SUN BID PRICE.

NOTE 2:
WHERE UTILITY TRENCHES EXTEND BEYOND THE ROADWAY SHOULDER, UTILITY SLOPES, CR-6 BACKFILL SHALL BE USED TO THE TOP OF THE SUBBASE AND THE TOP ONE FOOT OF TRENCH SHALL BE FINISHED TO GRADE WITH SEED AND MULCH.

* TRENCH WIDTH FOR STORM DRAIN INSTALLATION SHALL BE EITHER TWICE THE OUTSIDE DIAMETER OF THE PIPE, OR OUTSIDE DIAMETER PLUS 3 FEET, WHICHEVER IS LESS.

Martin B. Covington II, PE
SWM Program Engineer
DISTRIBUTED FOR COMMENT
C.C. SURVEYORS MTG. SEPT. 18, 2008, MARCH 19, 2014, NOV. 19, 2014, JAN. 21, 2015
(CORRECT REFERENCES APRIL 20, 2016)
EFFECTIVE DATES: NOV. 18, 2008, JAN. 21, 2015, MAY 20, 2016

128 [86 (AMENDED)]

b-4/13/2016-8:24:10 AM-G:\CLS\CC_SWM_Details\details(V8).dgn--Default

MODIFIED METHOD OF FLEXIBLE PIPE INSTALLATION UP TO 60" PIPES (CMP,PVC,HDPE,ETC) IN UNPAVED AREAS (OPEN FIELD INSTALLATION)

FOR STORMWATER MANAGEMENT RETRO-FIT PROJECTS

BASED ON INFORMATION FROM CONTECH,ADS, LANE & HANSEN*

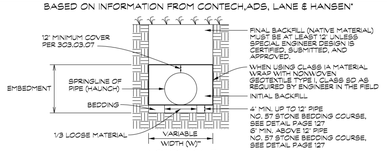

NOT TO SCALE

EMBEDMENT MATERIALS

1. INSTALLATION IN ACCORDANCE WITH ASTM D 2321.
2. BEDDING AND INITIAL BACKFILL CAN BE CLASS I, II, OR III MATERIAL IF GROUNDWATER IS ENCOUNTERED THE EMBEDMENT MATERIAL MUST BE CLASS IA WRAPPED WITH GEOTEXTILE.
3. ALL PLACED IN MAXIMUM 8" LIFTS WITH CLASS IB, II, & III MATERIAL COMPACTED TO 90% PROCTOR.

SANDS & GRAVELS

MAN MADE:
CLASS IA MANUFACTURED AGGREGATES, OPEN GRADED, CLEAN CRUSHED STONE OR GRAVEL WITH LARGE VOIDS. (NO. 57)
CLASS IB MANUFACTURED PROCESSED AGGREGATES WITH SAND (GAS OR CR-6).

NATURAL:
CLASS I CLEAN, COARSE GRAINED SOILS, 1 1/2" MAXIMUM SIZE. SOIL CLASSIFICATIONS GW,GP, SW, SP, AND GW BORDERLINE GC, OR SP BORDERLINE SM.
CLASS II COARSE GRAINED SOILS WITH FINES, 1 1/2" MAXIMUM SIZE. SOIL CLASSIFICATIONS GM, GC, SM, OR SC.

"CONTECH "A-2000/D-2000/A 2028 UNLOADING/HANDLING AND INSTALLATION GUIDE" PAGES 20-25.

ADS "N-12 HP STORM TRENCH INSTALLATION DETAIL" DRAWING NO. STD-108, JAN 29, 2009.

LANE HIGH DENSITY POLYETHYLENE PIPE INSTALLATION PRACTICE PAGES 2 & 3.

HANSEN: PERSONAL COMMUNICATION

*TRENCH WIDTH FOR STORM DRAIN INSTALLATION USING CLASS IA, BACKFILL SHALL BE EITHER TWICE THE OUTSIDE DIAMETER OF THE PIPE OR OUTSIDE DIAMETER PLUS 3 FEET, WHICHEVER IS LESS.
TRENCH WIDTH FOR STORM DRAIN INSTALLATION USING CLASS IB, II, OR III BACKFILL MAY BE NO LESS THAN OUTSIDE DIAMETER OF THE PIPE PLUS 3 FEET TO ALLOW FOR COMPACTION.

MARTIN B. COVINGTON II, PE
SWM PROGRAM ENGINEER
DISTRIBUTED FOR COMMENT
C.C. SURVEYORS MTG NOV 16, 2011, MARCH 19, 2014
(CORRECT REFERENCES APRIL 20, 2016)
EFFECTIVE DATES: JAN. 2011, JAN 21, 2015, MAY 20, 2016

129

b-4/13/2016-8:23:55 AM-G:\CLS\CC_SWM_Details\details(V8).dgn--Default

NOTES:

1. PER DETAIL, MINIMUM TOTAL COVER FOR FLEXIBLE PIPE IN UNPAVED AREA SHALL BE 24", WITH THE EXCEPTION OF THE PROPOSED 24" CPP-S FROM PR-I-206 TO PR-I-207, WHICH SHALL HAVE A MINIMUM COVER OF 16" (12" INITIAL BACKFILL PLUS 4" TOPSOIL). WHERE TOTAL COVER IS LESS THAN 24", BEDDING AND INITIAL BACKFILL ARE REQUIRED TO BE CLASS 1A.

OWNER / DEVELOPER:

CARROLL COUNTY
DEPARTMENT OF LAND AND RESOURCE MANAGEMENT
BUREAU OF RESOURCE MANAGEMENT
225 N. CENTER ST
WESTMINSTER, MARYLAND 21157-5194
PHONE: 410.386.2668

LAND OWNERS:

RICHARD J. & MARY L. GULAS
5812 MIRIAM DRIVE - LOT 39
PARCEL: 0575 TAX MAP: 0073 GRID: 0004

JOHN S. & DEBORAH A. BOEHL
5814 MIRIAM DRIVE - LOT 40
PARCEL: 0576 TAX MAP: 0073 GRID: 0004

LYNN E. GRAHAM
5807 MIRIAM DRIVE - LOT 58
PARCEL: 0576 TAX MAP: 0073 GRID: 0004

ELAINE M. ROSS
5811 MIRIAM DRIVE - LOT 57
PARCEL: 0575 TAX MAP: 0073 GRID: 0004

MARY M. & KATHLEEN W. REYNOLDS
5830 MIRIAM DRIVE - LOT "PARCEL I"
PARCEL: 0575 TAX MAP: 0073 GRID: 0004

JEFFREY D. CREUTZER & KAREN M. HILNBRAND
1107 COURTLAND DRIVE - LOT 18A
PARCEL: 0575 TAX MAP: 0073 GRID: 0004

JOSEPH W. & LISA V. THORPE
1105 COURTLAND DRIVE - LOT 19A
PARCEL: 0575 TAX MAP: 0073 GRID: 0004

TIMOTHY & BRITTANY BECK
1103 COURTLAND DRIVE - LOT 20A
PARCEL: 0575 TAX MAP: 0073 GRID: 0004

WAYNE & LORI HOWES
1104 JOHNSVILLE ROAD - LOT 2A
PARCEL: 0575 TAX MAP: 0073 GRID: 0004

MARK L. & JILL E. MARCIANTE
1102 JOHNSVILLE ROAD - LOT 1A
PARCEL: 0575 TAX MAP: 0073 GRID: 0004

REVISIONS		
NO.	DATE	DESCRIPTION

CENTURY ENGINEERING
CONSULTING ENGINEERS - PLANNERS
10710 GILROY ROAD
HUNT VALLEY, MARYLAND 21031
PHONE: (443) 589-2400 FAX: (443) 589-2401

CARROLL COUNTY BRYNWOOD STORM DRAIN IMPROVEMENTS

FINAL DESIGN

TITLE:

DRAINAGE DETAILS

COUNTY FILE NO:	SCALE:	DATE:
GRO-20-0009	AS SHOWN	1/13/2023
SEAL:	DESIGN: AW	CHECK: TT
	DWG NO: DE-02 OF DE-02	
	SHEET NO: 11 OF 17	

STATE OF MARYLAND — THOMAS G. TURNER — NO. 16997 — REGISTERED PROFESSIONAL ENGINEER

I HEREBY CERTIFY THAT THESE DOCUMENTS WERE PREPARED OR APPROVED BY ME, AND THAT I AM A DULY LICENSED PROFESSIONAL ENGINEER UNDER THE LAWS OF THE STATE OF MARYLAND.

LICENSE #: 16997 EXPIRES: 7/19/2024

T:\2020\TRANSPORTATION\171196.10 CARROLL CO BRYNWOOD STORM DRAIN IMPROVEMENTS\CADD\DE-0000_BRYNWOOD.DWG

LEGEND

1' MINOR CONTOUR (GIS)	— — —	DRAINAGE AREA BOUNDARY	▬ ▬ ▬	LAND USE: IMPERVIOUS	(light grey)
5' MAJOR CONTOUR (GIS)	—— 600 ——	POINT OF INVESTIGATION	*	LAND USE: WOODS	(dark grey)
EX. STORM DRAIN (GIS)	—— SD ——	TC FLOW PATH SEGMENT	A |—— >> ——| B	LAND USE: OPEN SPACE	(white)
IMPERVIOUS AREA (GIS)	(outlined box)	HYDROLOGIC SOIL GROUP	— - B/D - —	PR. STORM DRAIN	(solid dark line)

RATIONAL METHOD TIME OF CONCENTRATION - DRAINAGE AREA 1A

SEGMENT	FLOW TYPE	LENGTH (LF)	SLOPE (FT/FT)	MANNING'S N	VELOCITY (FPS)	TIME (MIN)
A-B	OVERLAND FLOW	100	0.023	0.400	-	11.25
B-C	SWALE FLOW	497	-	-	1.8	4.60
C-D	DITCH FLOW	361	-	-	3.0	2.01
D-E	PIPE FLOW	49	-	-	8.0	0.10
					TIME OF CONCENTRATION	15.00 (MAX.)

RATIONAL METHOD TIME OF CONCENTRATION - DRAINAGE AREA 1B

SEGMENT	FLOW TYPE	LENGTH (LF)	SLOPE (FT/FT)	MANNING'S N	VELOCITY (FPS)	TIME (MIN)
A-B	OVERLAND FLOW	100	0.071	0.400	-	8.63
B-C	SWALE FLOW	283	-	-	4.2	1.12
C-D	DITCH FLOW	49	-	-	3.5	0.23
					TIME OF CONCENTRATION	9.99

RATIONAL METHOD TIME OF CONCENTRATION - DRAINAGE AREA 1C

SEGMENT	FLOW TYPE	LENGTH (LF)	SLOPE (FT/FT)	MANNING'S N	VELOCITY (FPS)	TIME (MIN)
A-B	OVERLAND FLOW	91	0.088	0.400	-	7.85
B-C	GUTTER FLOW	651	0.064	-	5.4	2.01
					TIME OF CONCENTRATION	9.86

RATIONAL METHOD TIME OF CONCENTRATION - DRAINAGE AREA 1D

SEGMENT	FLOW TYPE	LENGTH (LF)	SLOPE (FT/FT)	MANNING'S N	VELOCITY (FPS)	TIME (MIN)
A-B	OVERLAND FLOW	100	0.049	0.347	-	8.81
B-C	GUTTER FLOW	556	0.066	-	5.4	1.72
					TIME OF CONCENTRATION	10.53

RATIONAL METHOD TIME OF CONCENTRATION - DRAINAGE AREA 1E

SEGMENT	FLOW TYPE	LENGTH (LF)	SLOPE (FT/FT)	MANNING'S N	VELOCITY (FPS)	TIME (MIN)
A-B	OVERLAND FLOW	100	0.027	0.600	-	13.09
B-C	SWALE FLOW	604	-	-	4.3	2.34
C-D	DITCH FLOW	95	-	-	3.0	0.53
					TIME OF CONCENTRATION	15.00 (MAX.)

RATIONAL METHOD TIME OF CONCENTRATION - DRAINAGE AREA 2A

SEGMENT	FLOW TYPE	LENGTH (LF)	SLOPE (FT/FT)	MANNING'S N	VELOCITY (FPS)	TIME (MIN)
A-B	OVERLAND FLOW	100	0.036	0.400	-	10.13
B-C	GUTTER FLOW	290	-	-	5.4	0.90
C-D	GUTTER FLOW	405	0.026	-	3.8	1.78
					TIME OF CONCENTRATION	12.80

RATIONAL METHOD TIME OF CONCENTRATION - DRAINAGE AREA 2B

SEGMENT	FLOW TYPE	LENGTH (LF)	SLOPE (FT/FT)	MANNING'S N	VELOCITY (FPS)	TIME (MIN)
A-B	OVERLAND FLOW	100	0.057	0.347	-	8.50
B-C	SWALE FLOW	474	-	-	4.7	1.68
C-D	DITCH FLOW	270	-	-	3.5	1.29
					TIME OF CONCENTRATION	11.47

RATIONAL METHOD TIME OF CONCENTRATION - DRAINAGE AREA 2C

SEGMENT	FLOW TYPE	LENGTH (LF)	SLOPE (FT/FT)	MANNING'S N	VELOCITY (FPS)	TIME (MIN)
A-B	OVERLAND FLOW	100	0.062	0.400	-	8.91
B-C	SWALE FLOW	252	-	-	4.3	0.98
					TIME OF CONCENTRATION	9.89

RATIONAL METHOD TIME OF CONCENTRATION - DRAINAGE AREA 2D

SEGMENT	FLOW TYPE	LENGTH (LF)	SLOPE (FT/FT)	MANNING'S N	VELOCITY (FPS)	TIME (MIN)
A-B	OVERLAND FLOW	92	0.071	0.400	-	8.30
B-C	GUTTER FLOW	1226	0.056	-	5.5	3.72
					TIME OF CONCENTRATION	12.02

RATIONAL METHOD TIME OF CONCENTRATION - DRAINAGE AREA 2E

SEGMENT	FLOW TYPE	LENGTH (LF)	SLOPE (FT/FT)	MANNING'S N	VELOCITY (FPS)	TIME (MIN)
A-B	OVERLAND FLOW	90	0.072	0.400	-	8.19
B-C	GUTTER FLOW	305	0.064	-	5.5	0.92
					TIME OF CONCENTRATION	9.12

RATIONAL METHOD TIME OF CONCENTRATION - DRAINAGE AREA 2F

SEGMENT	FLOW TYPE	LENGTH (LF)	SLOPE (FT/FT)	MANNING'S N	VELOCITY (FPS)	TIME (MIN)
A-B	OVERLAND FLOW	100	0.078	0.510	-	9.46
B-C	SWALE FLOW	144	-	-	4.3	0.56
C-D	GUTTER FLOW	687	0.044	-	4.3	2.66
					TIME OF CONCENTRATION	12.68

RATIONAL METHOD TIME OF CONCENTRATION - DRAINAGE AREA 2G

SEGMENT	FLOW TYPE	LENGTH (LF)	SLOPE (FT/FT)	MANNING'S N	VELOCITY (FPS)	TIME (MIN)
A-B	OVERLAND FLOW	63	0.075	0.291	-	5.92
B-C	SWALE FLOW	145	-	-	4.0	0.60
					TIME OF CONCENTRATION	6.53

RATIONAL METHOD TIME OF CONCENTRATION - DRAINAGE AREA 2H

SEGMENT	FLOW TYPE	LENGTH (LF)	SLOPE (FT/FT)	MANNING'S N	VELOCITY (FPS)	TIME (MIN)
A-B	OVERLAND FLOW	48	0.067	0.400	-	6.21
B-C	SWALE FLOW	78	-	-	2.0	0.65
					TIME OF CONCENTRATION	6.86

T:\2020\TRANSPORTATION\171166.10 CARROLL CO BRYNWOOD STORM DRAIN IMPROVEMENTS\CADD\PDA-0001_BRYNWOOD.DWG

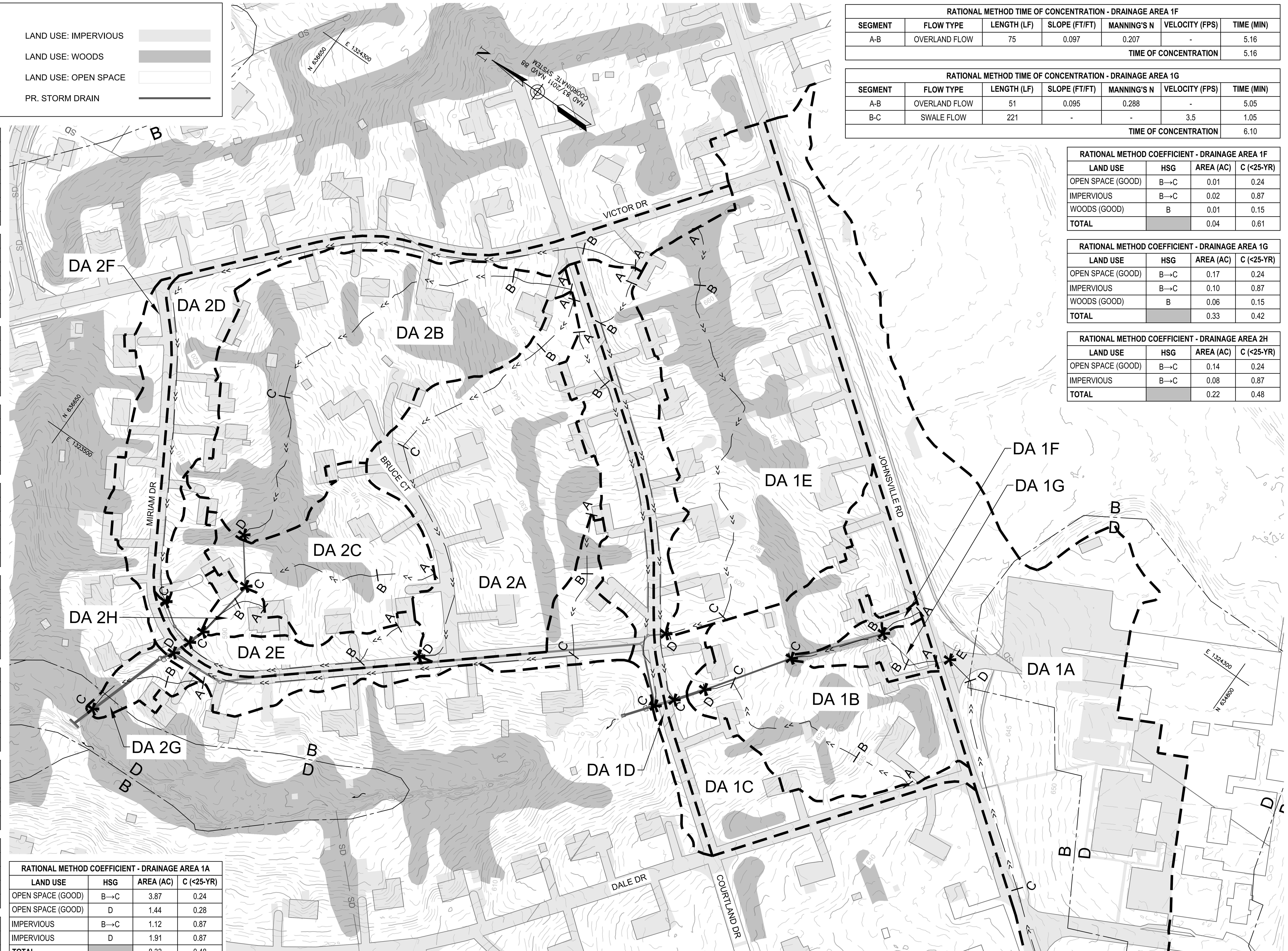

RATIONAL METHOD TIME OF CONCENTRATION - DRAINAGE AREA 1F

SEGMENT	FLOW TYPE	LENGTH (LF)	SLOPE (FT/FT)	MANNING'S N	VELOCITY (FPS)	TIME (MIN)
A-B	OVERLAND FLOW	75	0.097	0.207	-	5.16
					TIME OF CONCENTRATION	5.16

RATIONAL METHOD TIME OF CONCENTRATION - DRAINAGE AREA 1G

SEGMENT	FLOW TYPE	LENGTH (LF)	SLOPE (FT/FT)	MANNING'S N	VELOCITY (FPS)	TIME (MIN)
A-B	OVERLAND FLOW	51	0.095	0.288	-	5.05
B-C	SWALE FLOW	221	-	-	3.5	1.05
					TIME OF CONCENTRATION	6.10

RATIONAL METHOD COEFFICIENT - DRAINAGE AREA 1F

LAND USE	HSG	AREA (AC)	C (<25-YR)
OPEN SPACE (GOOD)	B→C	0.01	0.24
IMPERVIOUS	B→C	0.02	0.87
WOODS (GOOD)	B	0.01	0.15
TOTAL		0.04	0.61

RATIONAL METHOD COEFFICIENT - DRAINAGE AREA 1G

LAND USE	HSG	AREA (AC)	C (<25-YR)
OPEN SPACE (GOOD)	B→C	0.17	0.24
IMPERVIOUS	B→C	0.10	0.87
WOODS (GOOD)	B	0.06	0.15
TOTAL		0.33	0.42

RATIONAL METHOD COEFFICIENT - DRAINAGE AREA 2H

LAND USE	HSG	AREA (AC)	C (<25-YR)
OPEN SPACE (GOOD)	B→C	0.14	0.24
IMPERVIOUS	B→C	0.08	0.87
TOTAL		0.22	0.48

RATIONAL METHOD COEFFICIENT - DRAINAGE AREA 1A

LAND USE	HSG	AREA (AC)	C (<25-YR)
OPEN SPACE (GOOD)	B→C	3.87	0.24
OPEN SPACE (GOOD)	D	1.44	0.28
IMPERVIOUS	B→C	1.12	0.87
IMPERVIOUS	D	1.91	0.87
TOTAL		8.33	0.48

RATIONAL METHOD COEFFICIENT - DRAINAGE AREA 1B

LAND USE	HSG	AREA (AC)	C (<25-YR)
OPEN SPACE (GOOD)	B→C	1.76	0.24
IMPERVIOUS	B→C	0.48	0.87
WOODS (GOOD)	B	0.49	0.15
TOTAL		2.73	0.33

RATIONAL METHOD COEFFICIENT - DRAINAGE AREA 1C

LAND USE	HSG	AREA (AC)	C (<25-YR)
OPEN SPACE (GOOD)	B→C	1.18	0.24
IMPERVIOUS	B→C	0.66	0.87
WOODS (GOOD)	B	0.11	0.15
TOTAL		1.95	0.45

RATIONAL METHOD COEFFICIENT - DRAINAGE AREA 1D

LAND USE	HSG	AREA (AC)	C (<25-YR)
OPEN SPACE (GOOD)	B→C	0.62	0.24
IMPERVIOUS	B→C	0.47	0.87
WOODS (GOOD)	B	0.04	0.15
TOTAL		1.13	0.50

RATIONAL METHOD COEFFICIENT - DRAINAGE AREA 1E

LAND USE	HSG	AREA (AC)	C (<25-YR)
OPEN SPACE (GOOD)	B→C	2.50	0.24
IMPERVIOUS	B→C	1.06	0.87
WOODS (GOOD)	B	1.19	0.15
TOTAL		4.75	0.36

RATIONAL METHOD COEFFICIENT - DRAINAGE AREA 2A

LAND USE	HSG	AREA (AC)	C (<25-YR)
OPEN SPACE (GOOD)	B→C	2.10	0.24
IMPERVIOUS	B→C	0.73	0.87
WOODS (GOOD)	B	0.43	0.15
TOTAL		3.26	0.37

RATIONAL METHOD COEFFICIENT - DRAINAGE AREA 2B

LAND USE	HSG	AREA (AC)	C (<25-YR)
OPEN SPACE (GOOD)	B→C	2.10	0.24
IMPERVIOUS	B→C	0.66	0.87
WOODS (GOOD)	B	1.11	0.15
TOTAL		3.87	0.32

RATIONAL METHOD COEFFICIENT - DRAINAGE AREA 2C

LAND USE	HSG	AREA (AC)	C (<25-YR)
OPEN SPACE (GOOD)	B→C	0.93	0.24
IMPERVIOUS	B→C	0.25	0.87
WOODS (GOOD)	B	0.33	0.15
TOTAL		1.51	0.33

RATIONAL METHOD COEFFICIENT - DRAINAGE AREA 2D

LAND USE	HSG	AREA (AC)	C (<25-YR)
OPEN SPACE (GOOD)	B→C	0.82	0.24
IMPERVIOUS	B→C	0.63	0.87
WOODS (GOOD)	B	0.12	0.15
TOTAL		1.57	0.49

RATIONAL METHOD COEFFICIENT - DRAINAGE AREA 2E

LAND USE	HSG	AREA (AC)	C (<25-YR)
OPEN SPACE (GOOD)	B→C	0.66	0.24
IMPERVIOUS	B→C	0.24	0.87
WOODS (GOOD)	B	0.03	0.15
TOTAL		0.93	0.40

RATIONAL METHOD COEFFICIENT - DRAINAGE AREA 2F

LAND USE	HSG	AREA (AC)	C (<25-YR)
OPEN SPACE (GOOD)	B→C	0.86	0.24
IMPERVIOUS	B→C	0.69	0.87
WOODS (GOOD)	B	0.15	0.15
TOTAL		1.69	0.49

RATIONAL METHOD COEFFICIENT - DRAINAGE AREA 2G

LAND USE	HSG	AREA (AC)	C (<25-YR)
OPEN SPACE (GOOD)	B→C	0.14	0.24
IMPERVIOUS	B→C	0.05	0.87
WOODS (GOOD)	B	0.03	0.15
WOODS (GOOD)	D	0.03	0.21
TOTAL		0.25	0.34

OWNER / DEVELOPER:

CARROLL COUNTY
DEPARTMENT OF LAND AND RESOURCE MANAGEMENT
BUREAU OF RESOURCE MANAGEMENT
225 N. CENTER ST
WESTMINSTER, MARYLAND 21157-5194
PHONE: 410.386.2668

LAND OWNERS:

RICHARD J. & MARY L. GULAS
5812 MIRIAM DRIVE - LOT 39
PARCEL: 0575 TAX MAP: 0073 GRID: 0004

JOHN S. & DEBORAH A. BOEHL
5814 MIRIAM DRIVE - LOT 40
PARCEL: 0576 TAX MAP: 0073 GRID: 0004

LYNN E. GRAHAM
5807 MIRIAM DRIVE - LOT 58
PARCEL: 0576 TAX MAP: 0073 GRID: 0004

ELAINE M. ROSS
5811 MIRIAM DRIVE - LOT 57
PARCEL: 0575 TAX MAP: 0073 GRID: 0004

MARY M. & KATHLEEN W. REYNOLDS
5830 MIRIAM DRIVE - LOT "PARCEL I"
PARCEL: 0575 TAX MAP: 0073 GRID: 0004

JEFFREY D. CREUTZER & KAREN M. HILNBRAND
1107 COURTLAND DRIVE - LOT 18A
PARCEL: 0575 TAX MAP: 0073 GRID: 0004

JOSEPH W. & LISA V. THORPE
1105 COURTLAND DRIVE - LOT 19A
PARCEL: 0575 TAX MAP: 0073 GRID: 0004

TIMOTHY & BRITTANY BECK
1103 COURTLAND DRIVE - LOT 20A
PARCEL: 0575 TAX MAP: 0073 GRID: 0004

WAYNE & LORI HOWES
1104 JOHNSVILLE ROAD - LOT 2A
PARCEL: 0575 TAX MAP: 0073 GRID: 0004

MARK L. & JILL E. MARCIANTE
1102 JOHNSVILLE ROAD - LOT 1A
PARCEL: 0575 TAX MAP: 0073 GRID: 0004

REVISIONS

NO.	DATE	DESCRIPTION

CENTURY ENGINEERING
CONSULTING ENGINEERS - PLANNERS
10710 GILROY ROAD
HUNT VALLEY, MARYLAND 21031
PHONE: (443) 589-2400 FAX: (443) 589-2401

CARROLL COUNTY BRYNWOOD STORM DRAIN IMPROVEMENTS

FINAL DESIGN

TITLE:

DRAINAGE AREA MAP

COUNTY FILE NO: GRO-20-0009	SCALE: 1"=100'	DATE: 1/13/2023
SEAL:	DESIGN: AW	CHECK: TT
	DWG NO: DA-01 OF DA-01	
	SHEET NO: 12 OF 17	

STATE OF MARYLAND — THOMAS G. TURNER, JR. — NO. 16997 — REGISTERED — PROFESSIONAL ENGINEER

I HEREBY CERTIFY THAT THESE DOCUMENTS WERE PREPARED OR APPROVED BY ME, AND THAT I AM A DULY LICENSED PROFESSIONAL ENGINEER UNDER THE LAWS OF THE STATE OF MARYLAND.

LICENSE #: 16997 EXPIRES: 7/19/2024

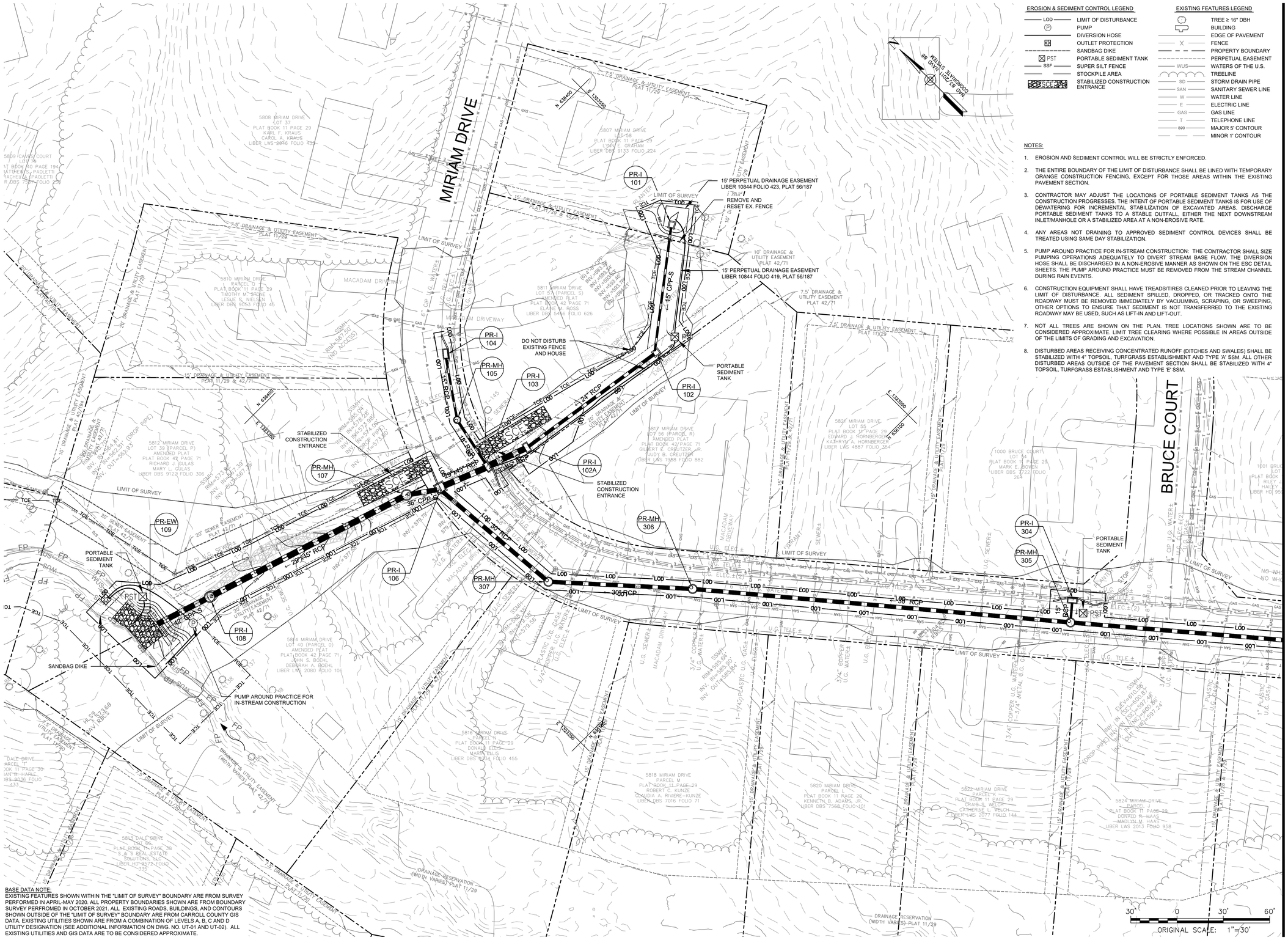

BASE DATA NOTE:
EXISTING FEATURES SHOWN WITHIN THE "LIMIT OF SURVEY" BOUNDARY ARE FROM SURVEY PERFORMED IN APRIL-MAY 2020. ALL PROPERTY BOUNDARIES SHOWN ARE FROM BOUNDARY SURVEY PERFROMED IN OCTOBER 2021. ALL EXISTING ROADS, BUILDINGS, AND CONTOURS SHOWN OUTSIDE OF THE "LIMIT OF SURVEY" BOUNDARY ARE FROM CARROLL COUNTY GIS DATA. EXISTING UTILITIES SHOWN ARE FROM A COMBINATION OF LEVELS A, B, C AND D UTILITY DESIGNATION (SEE ADDITIONAL INFORMATION ON DWG. NO. UT-01 AND UT-02). ALL EXISTING UTILITIES AND GIS DATA ARE TO BE CONSIDERED APPROXIMATE.

EROSION & SEDIMENT CONTROL LEGEND

- LOD — LIMIT OF DISTURBANCE
- PUMP
- DIVERSION HOSE
- OUTLET PROTECTION
- SANDBAG DIKE
- PST — PORTABLE SEDIMENT TANK
- SSF — SUPER SILT FENCE
- STOCKPILE AREA
- STABILIZED CONSTRUCTION ENTRANCE

EXISTING FEATURES LEGEND

- TREE ≥ 16" DBH
- BUILDING
- EDGE OF PAVEMENT
- X — FENCE
- PROPERTY BOUNDARY
- PERPETUAL EASEMENT
- WUS — WATERS OF THE U.S.
- TREELINE
- SD — STORM DRAIN PIPE
- SAN — SANITARY SEWER LINE
- W — WATER LINE
- E — ELECTRIC LINE
- GAS — GAS LINE
- T — TELEPHONE LINE
- 580 — MAJOR 5' CONTOUR
- MINOR 1' CONTOUR

NOTES:

1. EROSION AND SEDIMENT CONTROL WILL BE STRICTLY ENFORCED.
2. THE ENTIRE BOUNDARY OF THE LIMIT OF DISTURBANCE SHALL BE LINED WITH TEMPORARY ORANGE CONSTRUCTION FENCING, EXCEPT FOR THOSE AREAS WITHIN THE EXISTING PAVEMENT SECTION.
3. CONTRACTOR MAY ADJUST THE LOCATIONS OF PORTABLE SEDIMENT TANKS AS THE CONSTRUCTION PROGRESSES. THE INTENT OF PORTABLE SEDIMENT TANKS IS FOR USE OF DEWATERING FOR INCREMENTAL STABILIZATION OF EXCAVATED AREAS. DISCHARGE PORTABLE SEDIMENT TANKS TO A STABLE OUTFALL, EITHER THE NEXT DOWNSTREAM INLET/MANHOLE OR A STABILIZED AREA AT A NON-EROSIVE RATE.
4. ANY AREAS NOT DRAINING TO APPROVED SEDIMENT CONTROL DEVICES SHALL BE TREATED USING SAME DAY STABILIZATION.
5. PUMP AROUND PRACTICE FOR IN-STREAM CONSTRUCTION: THE CONTRACTOR SHALL SIZE PUMPING OPERATIONS ADEQUATELY TO DIVERT STREAM BASE FLOW. THE DIVERSION HOSE SHALL BE DISCHARGED IN A NON-EROSIVE MANNER AS SHOWN ON THE ESC DETAIL SHEETS. THE PUMP AROUND PRACTICE MUST BE REMOVED FROM THE STREAM CHANNEL DURING RAIN EVENTS.
6. CONSTRUCTION EQUIPMENT SHALL HAVE TREADS/TIRES CLEANED PRIOR TO LEAVING THE LIMIT OF DISTURBANCE. ALL SEDIMENT SPILLED, DROPPED, OR TRACKED ONTO THE ROADWAY MUST BE REMOVED IMMEDIATELY BY VACUUMING, SCRAPING, OR SWEEPING, OTHER OPTIONS TO ENSURE THAT SEDIMENT IS NOT TRANSFERRED TO THE EXISTING ROADWAY MAY BE USED, SUCH AS LIFT-IN AND LIFT-OUT.
7. NOT ALL TREES ARE SHOWN ON THE PLAN. TREE LOCATIONS SHOWN ARE TO BE CONSIDERED APPROXIMATE. LIMIT TREE CLEARING WHERE POSSIBLE IN AREAS OUTSIDE OF THE LIMITS OF GRADING AND EXCAVATION.
8. DISTURBED AREAS RECEIVING CONCENTRATED RUNOFF (DITCHES AND SWALES) SHALL BE STABILIZED WITH 4" TOPSOIL, TURFGRASS ESTABLISHMENT AND TYPE 'A' SSM. ALL OTHER DISTURBED AREAS OUTSIDE OF THE PAVEMENT SECTION SHALL BE STABILIZED WITH 4" TOPSOIL, TURFGRASS ESTABLISHMENT AND TYPE 'E' SSM.

MATCHLINE- SEE SHEET ES-02

OWNER / DEVELOPER:

CARROLL COUNTY
DEPARTMENT OF LAND AND RESOURCE MANAGEMENT
BUREAU OF RESOURCE MANAGEMENT
225 N. CENTER ST
WESTMINSTER, MARYLAND 21157-5194
PHONE: 410.386.2668

LAND OWNERS:

RICHARD J. & MARY L. GULAS
5812 MIRIAM DRIVE - LOT 39
PARCEL: 0575 TAX MAP: 0073 GRID: 0004

JOHN S. & DEBORAH A. BOEHL
5814 MIRIAM DRIVE - LOT 40
PARCEL: 0576 TAX MAP: 0073 GRID: 0004

LYNN E. GRAHAM
5807 MIRIAM DRIVE - LOT 58
PARCEL: 0576 TAX MAP: 0073 GRID: 0004

ELAINE M. ROSS
5811 MIRIAM DRIVE - LOT 57
PARCEL: 0575 TAX MAP: 0073 GRID: 0004

MARY M. & KATHLEEN W. REYNOLDS
5830 MIRIAM DRIVE - LOT "PARCEL I"
PARCEL: 0575 TAX MAP: 0073 GRID: 0004

JEFFREY D. CREUTZER & KAREN M. HILNBRAND
1107 COURTLAND DRIVE - LOT 18A
PARCEL: 0575 TAX MAP: 0073 GRID: 0004

JOSEPH W. & LISA V. THORPE
1105 COURTLAND DRIVE - LOT 19A
PARCEL: 0575 TAX MAP: 0073 GRID: 0004

TIMOTHY & BRITTANY BECK
1103 COURTLAND DRIVE - LOT 20A
PARCEL: 0575 TAX MAP: 0073 GRID: 0004

WAYNE & LORI HOWES
1104 JOHNSVILLE ROAD - LOT 2A
PARCEL: 0575 TAX MAP: 0073 GRID: 0004

MARK L. & JILL E. MARCIANTE
1102 JOHNSVILLE ROAD - LOT 1A
PARCEL: 0575 TAX MAP: 0073 GRID: 0004

REVISIONS

NO.	DATE	DESCRIPTION

CENTURY ENGINEERING
CONSULTING ENGINEERS - PLANNERS
10710 GILROY ROAD
HUNT VALLEY, MARYLAND 21031
PHONE: (443) 589-2400 FAX: (443) 589-2401

CARROLL COUNTY BRYNWOOD STORM DRAIN IMPROVEMENTS

FINAL DESIGN

TITLE:

EROSION & SEDIMENT CONTROL PLAN

COUNTY FILE NO: GRO-20-0009	SCALE: 1"=30'	DATE: 1/13/2023
SEAL: STATE OF MARYLAND — THOMAS G. TURNER — NO. 16997 — REGISTERED PROFESSIONAL ENGINEER	DESIGN: AW	CHECK: TT
	DWG NO: ES-01 OF ES-02	
	SHEET NO: 13 OF 17	

I HEREBY CERTIFY THAT THESE DOCUMENTS WERE PREPARED OR APPROVED BY ME, AND THAT I AM A DULY LICENSED PROFESSIONAL ENGINEER UNDER THE LAWS OF THE STATE OF MARYLAND.

LICENSE # 16997 EXPIRES 7/18/2024

T:\2020\120006\PLANS\CARROLL CO. BRYNWOOD\PRIMARY\PRIMARY\ES-01-02.DWG, ES-01, 1/13/2023 10:00:00 AM, AWARD

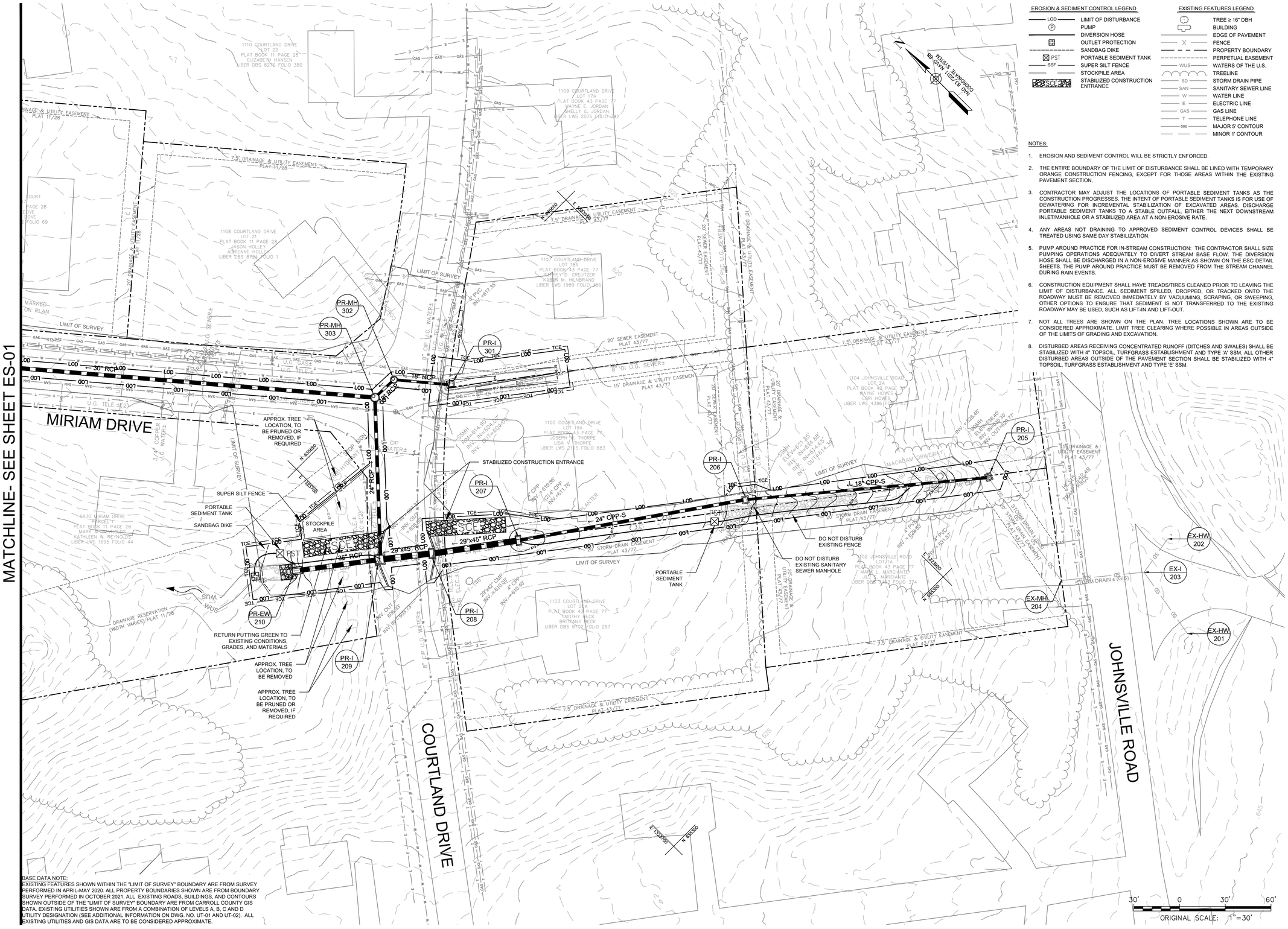

BASE DATA NOTE:
EXISTING FEATURES SHOWN WITHIN THE "LIMIT OF SURVEY" BOUNDARY ARE FROM SURVEY PERFORMED IN APRIL-MAY 2020. ALL PROPERTY BOUNDARIES SHOWN ARE FROM BOUNDARY SURVEY PERFORMED IN OCTOBER 2021. ALL EXISTING ROADS, BUILDINGS, AND CONTOURS SHOWN OUTSIDE OF THE "LIMIT OF SURVEY" BOUNDARY ARE FROM CARROLL COUNTY GIS DATA. EXISTING UTILITIES SHOWN ARE FROM A COMBINATION OF LEVELS A, B, C AND D UTILITY DESIGNATION (SEE ADDITIONAL INFORMATION ON DWG. NO. UT-01 AND UT-02). ALL EXISTING UTILITIES AND GIS DATA ARE TO BE CONSIDERED APPROXIMATE.

EROSION & SEDIMENT CONTROL LEGEND

- LOD — LIMIT OF DISTURBANCE
- PUMP
- DIVERSION HOSE
- OUTLET PROTECTION
- SANDBAG DIKE
- PST — PORTABLE SEDIMENT TANK
- SSF — SUPER SILT FENCE
- STOCKPILE AREA
- SCE — STABILIZED CONSTRUCTION ENTRANCE

EXISTING FEATURES LEGEND

- TREE ≥ 16" DBH
- BUILDING
- EDGE OF PAVEMENT
- X — FENCE
- PROPERTY BOUNDARY
- PERPETUAL EASEMENT
- WUS — WATERS OF THE U.S.
- TREELINE
- SD — STORM DRAIN PIPE
- SAN — SANITARY SEWER LINE
- W — WATER LINE
- E — ELECTRIC LINE
- GAS — GAS LINE
- T — TELEPHONE LINE
- 690 — MAJOR 5' CONTOUR
- MINOR 1' CONTOUR

NOTES:

1. EROSION AND SEDIMENT CONTROL WILL BE STRICTLY ENFORCED.
2. THE ENTIRE BOUNDARY OF THE LIMIT OF DISTURBANCE SHALL BE LINED WITH TEMPORARY ORANGE CONSTRUCTION FENCING, EXCEPT FOR THOSE AREAS WITHIN THE EXISTING PAVEMENT SECTION.
3. CONTRACTOR MAY ADJUST THE LOCATIONS OF PORTABLE SEDIMENT TANKS AS THE CONSTRUCTION PROGRESSES. THE INTENT OF PORTABLE SEDIMENT TANKS IS FOR USE OF DEWATERING FOR INCREMENTAL STABILIZATION OF EXCAVATED AREAS. DISCHARGE PORTABLE SEDIMENT TANKS TO A STABLE OUTFALL, EITHER THE NEXT DOWNSTREAM INLET/MANHOLE OR A STABILIZED AREA AT A NON-EROSIVE RATE.
4. ANY AREAS NOT DRAINING TO APPROVED SEDIMENT CONTROL DEVICES SHALL BE TREATED USING SAME DAY STABILIZATION.
5. PUMP AROUND PRACTICE FOR IN-STREAM CONSTRUCTION: THE CONTRACTOR SHALL SIZE PUMPING OPERATIONS ADEQUATELY TO DIVERT STREAM BASE FLOW. THE DIVERSION HOSE SHALL BE DISCHARGED IN A NON-EROSIVE MANNER AS SHOWN ON THE ESC DETAIL SHEETS. THE PUMP AROUND PRACTICE MUST BE REMOVED FROM THE STREAM CHANNEL DURING RAIN EVENTS.
6. CONSTRUCTION EQUIPMENT SHALL HAVE TREADS/TIRES CLEANED PRIOR TO LEAVING THE LIMIT OF DISTURBANCE. ALL SEDIMENT SPILLED, DROPPED, OR TRACKED ONTO THE ROADWAY MUST BE REMOVED IMMEDIATELY BY VACUUMING, SCRAPING, OR SWEEPING, OTHER OPTIONS TO ENSURE THAT SEDIMENT IS NOT TRANSFERRED TO THE EXISTING ROADWAY MAY BE USED, SUCH AS LIFT-IN AND LIFT-OUT.
7. NOT ALL TREES ARE SHOWN ON THE PLAN. TREE LOCATIONS SHOWN ARE TO BE CONSIDERED APPROXIMATE. LIMIT TREE CLEARING WHERE POSSIBLE IN AREAS OUTSIDE OF THE LIMITS OF GRADING AND EXCAVATION.
8. DISTURBED AREAS RECEIVING CONCENTRATED RUNOFF (DITCHES AND SWALES) SHALL BE STABILIZED WITH 4" TOPSOIL, TURFGRASS ESTABLISHMENT AND TYPE 'A' SSM. ALL OTHER DISTURBED AREAS OUTSIDE OF THE PAVEMENT SECTION SHALL BE STABILIZED WITH 4" TOPSOIL, TURFGRASS ESTABLISHMENT AND TYPE 'E' SSM.

OWNER / DEVELOPER:

CARROLL COUNTY
DEPARTMENT OF LAND AND RESOURCE MANAGEMENT
BUREAU OF RESOURCE MANAGEMENT
225 N. CENTER ST
WESTMINSTER, MARYLAND 21157-5194
PHONE: 410.386.2668

LAND OWNERS:

RICHARD J. & MARY L. GULAS
5812 MIRIAM DRIVE - LOT 39
PARCEL: 0575 TAX MAP: 0073 GRID: 0004

JOHN S. & DEBORAH A. BOEHL
5814 MIRIAM DRIVE - LOT 40
PARCEL: 0576 TAX MAP: 0073 GRID: 0004

LYNN E. GRAHAM
5807 MIRIAM DRIVE - LOT 58
PARCEL: 0576 TAX MAP: 0073 GRID: 0004

ELAINE M. ROSS
5811 MIRIAM DRIVE - LOT 57
PARCEL: 0575 TAX MAP: 0073 GRID: 0004

MARY M. & KATHLEEN W. REYNOLDS
5830 MIRIAM DRIVE - LOT "PARCEL I"
PARCEL: 0575 TAX MAP: 0073 GRID: 0004

JEFFREY D. CREUTZER & KAREN M. HILNBRAND
1107 COURTLAND DRIVE - LOT 18A
PARCEL: 0575 TAX MAP: 0073 GRID: 0004

JOSEPH W. & LISA V. THORPE
1105 COURTLAND DRIVE - LOT 19A
PARCEL: 0575 TAX MAP: 0073 GRID: 0004

TIMOTHY & BRITTANY BECK
1103 COURTLAND DRIVE - LOT 20A
PARCEL: 0575 TAX MAP: 0073 GRID: 0004

WAYNE & LORI HOWES
1104 JOHNSVILLE ROAD - LOT 2A
PARCEL: 0575 TAX MAP: 0073 GRID: 0004

MARK L. & JILL E. MARCIANTE
1102 JOHNSVILLE ROAD - LOT 1A
PARCEL: 0575 TAX MAP: 0073 GRID: 0004

REVISIONS		
NO.	DATE	DESCRIPTION

CENTURY ENGINEERING
CONSULTING ENGINEERS - PLANNERS
10710 GILROY ROAD
HUNT VALLEY, MARYLAND 21031
PHONE: (443) 589-2400 FAX: (443) 589-2401

CARROLL COUNTY BRYNWOOD STORM DRAIN IMPROVEMENTS

FINAL DESIGN

TITLE:

EROSION & SEDIMENT CONTROL PLAN

COUNTY FILE NO:	SCALE:	DATE:
GRO-20-0009	1"=30'	1/13/2023
SEAL:	DESIGN: AW	CHECK: TT
	DWG NO: ES-02 OF ES-02	
	SHEET NO: 14 OF 17	

STATE OF MARYLAND — THOMAS G. TURNER — No. 16997 — REGISTERED PROFESSIONAL ENGINEER

I HEREBY CERTIFY THAT THESE DOCUMENTS WERE PREPARED OR APPROVED BY ME, AND THAT I AM A DULY LICENSED PROFESSIONAL ENGINEER UNDER THE LAWS OF THE STATE OF MARYLAND.

LICENSE #: 16997 EXPIRES: 7/19/2024

DETAIL B-1 STABILIZED CONSTRUCTION ENTRANCE

STANDARD SYMBOL: SCE

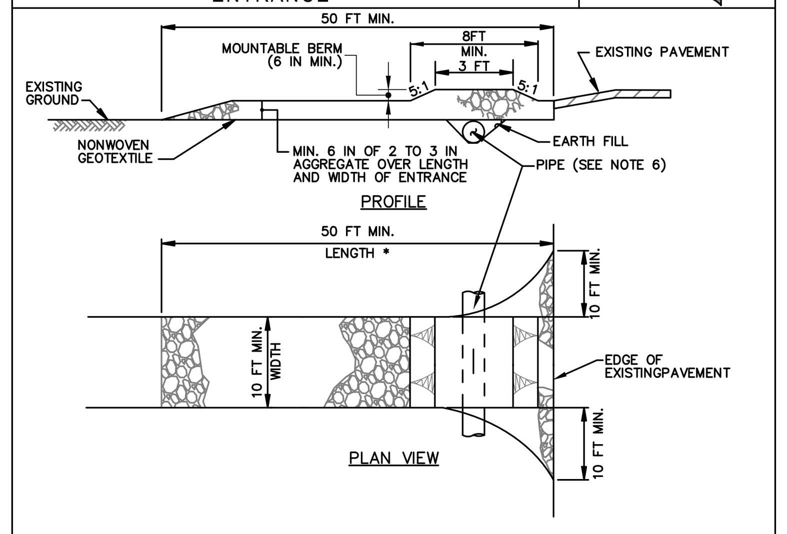

CONSTRUCTION SPECIFICATIONS

1. PLACE STABILIZED CONSTRUCTION ENTRANCE IN ACCORDANCE WITH THE APPROVED PLAN. VEHICLES MUST TRAVEL OVER THE ENTIRE LENGTH OF THE SCE. USE MINIMUM LENGTH OF 50 FEET (*30 FEET FOR SINGLE RESIDENCE LOT). USE MINIMUM WIDTH OF 10 FEET. FLARE SCE 10 FEET MINIMUM AT THE EXISTING ROAD TO PROVIDE A TURNING RADIUS.
2. PIPE ALL SURFACE WATER FLOWING TO OR DIVERTED TOWARD THE SCE UNDER THE ENTRANCE, MAINTAINING POSITIVE DRAINAGE. PROTECT PIPE INSTALLED THROUGH THE SCE WITH A MOUNTABLE BERM WITH 5:1 SLOPES AND A MINIMUM OF 12 INCHES OF STONE OVER THE PIPE. PROVIDE PIPE AS SPECIFIED ON APPROVED PLAN. WHEN THE SCE IS LOCATED AT A HIGH SPOT AND HAS NO DRAINAGE TO CONVEY, A PIPE IS NOT NECESSARY. A MOUNTABLE BERM IS REQUIRED WHEN SCE IS NOT LOCATED AT A HIGH SPOT.
3. PREPARE SUBGRADE AND PLACE NONWOVEN GEOTEXTILE, AS SPECIFIED IN SECTION H-1 MATERIALS.
4. PLACE CRUSHED AGGREGATE (2 TO 3 INCHES IN SIZE) OR EQUIVALENT RECYCLED CONCRETE (WITHOUT REBAR) AT LEAST 6 INCHES DEEP OVER THE LENGTH AND WIDTH OF THE SCE.
5. MAINTAIN ENTRANCE IN A CONDITION THAT MINIMIZES TRACKING OF SEDIMENT. ADD STONE OR MAKE OTHER REPAIRS AS CONDITIONS DEMAND TO MAINTAIN CLEAN SURFACE, MOUNTABLE BERM, AND SPECIFIED DIMENSIONS. IMMEDIATELY REMOVE STONE AND/OR SEDIMENT SPILLED, DROPPED, OR TRACKED ONTO ADJACENT ROADWAY BY VACUUMING, SCRAPING, AND/OR SWEEPING. WASHING ROADWAY TO REMOVE MUD TRACKED ONTO PAVEMENT IS NOT ACCEPTABLE UNLESS WASH WATER IS DIRECTED TO AN APPROVED SEDIMENT CONTROL PRACTICE.

MARYLAND STANDARDS AND SPECIFICATIONS FOR SOIL EROSION AND SEDIMENT CONTROL

U.S. DEPARTMENT OF AGRICULTURE NATURAL RESOURCES CONSERVATION SERVICE	2011	MARYLAND DEPARTMENT OF ENVIRONMENT WATER MANAGEMENT ADMINISTRATION

DETAIL B-4-6-A TEMPORARY SOIL STABILIZATION MATTING CHANNEL APPLICATION

STANDARD SYMBOL: TSSMC – * lb/ft² (* INCLUDE SHEAR STRESS)

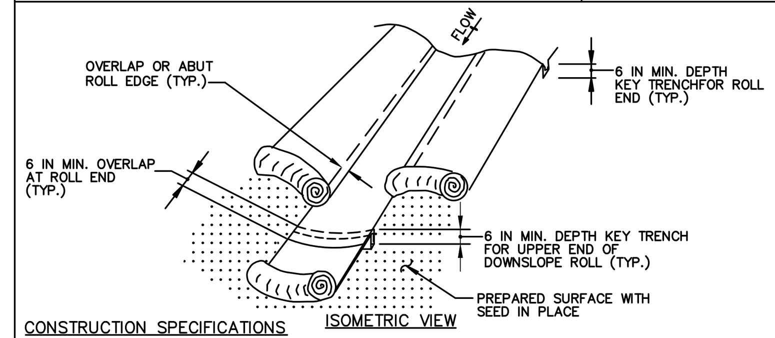

CONSTRUCTION SPECIFICATIONS

1. USE MATTING THAT HAS A DESIGN VALUE FOR SHEAR STRESS EQUAL TO OR HIGHER THAN THE SHEAR STRESS DESIGNATED ON APPROVED PLANS.
2. USE TEMPORARY SOIL STABILIZATION MATTING MADE OF DEGRADABLE (LASTS 6 MONTHS MINIMUM) NATURAL OR MAN-MADE FIBERS (MOSTLY ORGANIC). MAT MUST HAVE UNIFORM THICKNESS AND DISTRIBUTION OF FIBERS THROUGHOUT AND BE SMOLDER RESISTANT. CHEMICALS USED IN THE MAT MUST BE NON-LEACHING AND NON-TOXIC TO VEGETATION AND SEED GERMINATION AND NON-INJURIOUS TO THE SKIN. IF PRESENT, NETTING MUST BE EXTRUDED PLASTIC WITH A MAXIMUM MESH OPENING OF 2x2 INCHES AND SUFFICIENTLY BONDED OR SEWN ON 2 INCH CENTERS ALONG LONGITUDINAL AXIS OF THE MATERIAL TO PREVENT SEPARATION OF THE NET FROM THE PARENT MATERIAL.
3. SECURE MATTING USING STEEL STAPLES, WOOD STAKES, OR BIODEGRADABLE EQUIVALENT. STAPLES MUST BE "U" OR "T" SHAPED STEEL WIRE HAVING A MINIMUM GAUGE OF NO. 11 AND NO. 8 RESPECTIVELY. "U" SHAPED STAPLES MUST AVERAGE 1 TO 1½ INCHES WIDE AND BE A MINIMUM OF 6 INCHES LONG. "T" SHAPED STAPLES MUST HAVE A MINIMUM 8 INCH MAIN LEG, A MINIMUM 1 INCH SECONDARY LEG, AND A MINIMUM 4 INCH HEAD. WOOD STAKES MUST BE ROUGH-SAWN HARDWOOD, 12 TO 24 INCHES IN LENGTH, 1x3 INCH IN CROSS SECTION, AND WEDGE SHAPED AT THE BOTTOM.
4. PERFORM FINAL GRADING, TOPSOIL APPLICATION, SEEDBED PREPARATION, AND PERMANENT SEEDING IN ACCORDANCE WITH SPECIFICATIONS. PLACE MATTING WITHIN 48 HOURS OF COMPLETING SEEDING OPERATIONS UNLESS END OF WORKDAY STABILIZATION IS SPECIFIED ON THE APPROVED EROSION AND SEDIMENT CONTROL PLAN.
5. UNROLL MATTING IN DIRECTION OF WATER FLOW, CENTERING THE FIRST ROLL ON THE CHANNEL CENTERLINE. WORK FROM CENTER OF CHANNEL OUTWARD WHEN PLACING ROLLS. LAY MAT SMOOTHLY AND FIRMLY ON THE SEEDED SURFACE. AVOID STRETCHING THE MATTING.
6. KEY-IN UPSTREAM END OF EACH MAT ROLL BY DIGGING A 6 INCH (MINIMUM) TRENCH AT THE UPSTREAM END OF THE MATTING, PLACING THE ROLL END IN THE TRENCH, STAPLING THE MAT IN PLACE, REPLACING THE EXCAVATED MATERIAL, AND TAMPING TO SECURE THE MAT END.
7. OVERLAP OR ABUT THE ROLL EDGES PER MANUFACTURER RECOMMENDATIONS. OVERLAP ROLL ENDS BY 6 INCHES (MINIMUM), WITH THE UPSTREAM MAT OVERLAPPING ON TOP OF THE NEXT DOWNSTREAM MAT.
8. STAPLE/STAKE MAT IN A STAGGERED PATTERN ON 4 FOOT (MAXIMUM) CENTERS THROUGHOUT AND 2 FOOT (MAXIMUM) CENTERS ALONG SEAMS, JOINTS, AND ROLL ENDS.
9. ESTABLISH AND MAINTAIN VEGETATION SO THAT REQUIREMENTS FOR ADEQUATE VEGETATIVE ESTABLISHMENT ARE CONTINUOUSLY MET IN ACCORDANCE WITH SECTION B-4 VEGETATIVE STABILIZATION.

MARYLAND STANDARDS AND SPECIFICATIONS FOR SOIL EROSION AND SEDIMENT CONTROL

U.S. DEPARTMENT OF AGRICULTURE NATURAL RESOURCES CONSERVATION SERVICE	2011	MARYLAND DEPARTMENT OF ENVIRONMENT WATER MANAGEMENT ADMINISTRATION

DETAIL B-4-6-B TEMPORARY SOIL STABILIZATION MATTING SLOPE APPLICATION

STANDARD SYMBOL: TSSMS – * lb/ft² (* INCLUDE SHEAR STRESS)

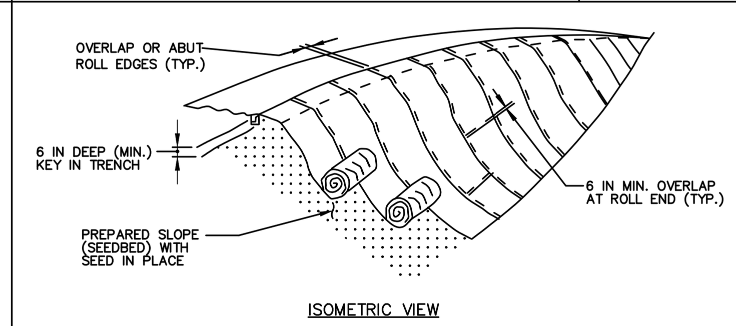

CONSTRUCTION SPECIFICATIONS

1. USE MATTING THAT HAS A DESIGN VALUE FOR SHEAR STRESS EQUAL TO OR HIGHER THAN THE SHEAR STRESS DESIGNATED ON APPROVED PLANS.
2. USE TEMPORARY SOIL STABILIZATION MATTING MADE OF DEGRADABLE (LASTS 6 MONTHS MINIMUM) NATURAL OR MAN-MADE FIBERS (MOSTLY ORGANIC). MAT MUST HAVE UNIFORM THICKNESS AND DISTRIBUTION OF FIBERS THROUGHOUT AND BE SMOLDER RESISTANT. CHEMICALS USED IN THE MAT MUST BE NON-LEACHING AND NON-TOXIC TO VEGETATION AND SEED GERMINATION AND NON-INJURIOUS TO THE SKIN. IF PRESENT, NETTING MUST BE EXTRUDED PLASTIC WITH A MAXIMUM MESH OPENING OF 2x2 INCHES AND SUFFICIENTLY BONDED OR SEWN ON 2 INCH CENTERS ALONG LONGITUDINAL AXIS OF THE MATERIAL TO PREVENT SEPARATION OF THE NET FROM THE PARENT MATERIAL.
3. SECURE MATTING USING STEEL STAPLES, WOOD STAKES, OR BIODEGRADABLE EQUIVALENT. STAPLES MUST BE "U" OR "T" SHAPED STEEL WIRE HAVING A MINIMUM GAUGE OF NO. 11 AND NO. 8 RESPECTIVELY. "U" SHAPED STAPLES MUST AVERAGE 1 TO 1½ INCHES WIDE AND BE A MINIMUM OF 6 INCHES LONG. "T" SHAPED STAPLES MUST HAVE A MINIMUM 8 INCH MAIN LEG, A MINIMUM 1 INCH SECONDARY LEG, AND A MINIMUM 4 INCH HEAD. WOOD STAKES MUST BE ROUGH-SAWN HARDWOOD, 12 TO 24 INCHES IN LENGTH, 1x3 INCH IN CROSS SECTION, AND WEDGE SHAPED AT THE BOTTOM.
4. PERFORM FINAL GRADING, TOPSOIL APPLICATION, SEEDBED PREPARATION, AND PERMANENT SEEDING IN ACCORDANCE WITH SPECIFICATIONS. PLACE MATTING WITHIN 48 HOURS OF COMPLETING SEEDING OPERATIONS UNLESS END OF WORKDAY STABILIZATION IS SPECIFIED ON THE APPROVED EROSION & SEDIMENT CONTROL PLAN.
5. UNROLL MATTING DOWNSLOPE. LAY MAT SMOOTHLY AND FIRMLY UPON THE SEEDED SURFACE. AVOID STRETCHING THE MATTING.
6. OVERLAP OR ABUT ROLL EDGES PER MANUFACTURER RECOMMENDATIONS. OVERLAP ROLL ENDS BY 6 INCHES (MINIMUM), WITH THE UPSLOPE MAT OVERLAPPING ON TOP OF THE DOWNSLOPE MAT.
7. KEY IN THE UPSLOPE END OF MAT 6 INCHES (MINIMUM) BY DIGGING A TRENCH, PLACING THE MATTING ROLL END IN THE TRENCH, STAPLING THE MAT IN PLACE, REPLACING THE EXCAVATED MATERIAL, AND TAMPING TO SECURE THE MAT END IN THE KEY.
8. STAPLE/STAKE MAT IN A STAGGERED PATTERN ON 4 FOOT (MAXIMUM) CENTERS THROUGHOUT AND 2 FOOT (MAXIMUM) CENTERS ALONG SEAMS, JOINTS, AND ROLL ENDS.
9. ESTABLISH AND MAINTAIN VEGETATION SO THAT REQUIREMENTS FOR ADEQUATE VEGETATIVE ESTABLISHMENT ARE CONTINUOUSLY MET IN ACCORDANCE WITH SECTION B-4 VEGETATIVE STABILIZATION.

MARYLAND STANDARDS AND SPECIFICATIONS FOR SOIL EROSION AND SEDIMENT CONTROL

U.S. DEPARTMENT OF AGRICULTURE NATURAL RESOURCES CONSERVATION SERVICE	2011	MARYLAND DEPARTMENT OF ENVIRONMENT WATER MANAGEMENT ADMINISTRATION

DETAIL E-3 SUPER SILT FENCE

STANDARD SYMBOL: SSF

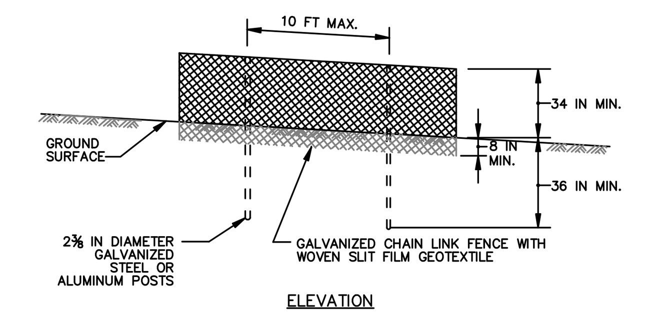

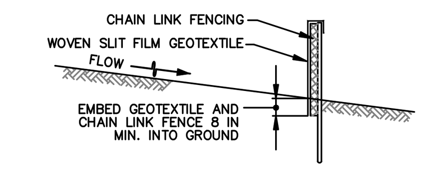

CONSTRUCTION SPECIFICATIONS

1. INSTALL 2⅜ INCH DIAMETER GALVANIZED STEEL POSTS OF 0.095 INCH WALL THICKNESS AND SIX FOOT LENGTH SPACED NO FURTHER THAN 10 FEET APART. DRIVE THE POSTS A MINIMUM OF 36 INCHES INTO THE GROUND.
2. FASTEN 9 GAUGE OR HEAVIER GALVANIZED CHAIN LINK FENCE (2⅜ INCH MAXIMUM OPENING) 42 INCHES IN HEIGHT SECURELY TO THE FENCE POSTS WITH WIRE TIES OR HUG RINGS.
3. FASTEN WOVEN SLIT FILM GEOTEXTILE AS SPECIFIED IN SECTION H-1 MATERIALS, SECURELY TO THE UPSLOPE SIDE OF CHAIN LINK FENCE WITH TIES SPACED EVERY 24 INCHES AT THE TOP AND MID SECTION. EMBED GEOTEXTILE AND CHAIN LINK FENCE A MINIMUM OF 8 INCHES INTO THE GROUND.
4. WHERE ENDS OF THE GEOTEXTILE COME TOGETHER, THE ENDS SHALL BE OVERLAPPED BY 6 INCHES, FOLDED, AND STAPLED TO PREVENT SEDIMENT BY PASS.
5. EXTEND BOTH ENDS OF THE SUPER SILT FENCE A MINIMUM OF FIVE HORIZONTAL FEET UPSLOPE AT 45 DEGREES TO THE MAIN FENCE ALIGNMENT TO PREVENT RUNOFF FROM GOING AROUND THE ENDS OF THE SUPER SILT FENCE.
6. PROVIDE MANUFACTURER CERTIFICATION TO THE INSPECTION/ENFORCEMENT AUTHORITY SHOWING THAT GEOTEXTILE USED MEETS THE REQUIREMENTS IN SECTION H-1 MATERIALS.
7. REMOVE ACCUMULATED SEDIMENT AND DEBRIS WHEN BULGES DEVELOP IN FENCE OR WHEN SEDIMENT REACHES 25% OF FENCE HEIGHT. REPLACE GEOTEXTILE IF TORN. IF UNDERMINING OCCURS, REINSTALL CHAIN LINK FENCING AND GEOTEXTILE.

MARYLAND STANDARDS AND SPECIFICATIONS FOR SOIL EROSION AND SEDIMENT CONTROL

U.S. DEPARTMENT OF AGRICULTURE NATURAL RESOURCES CONSERVATION SERVICE	2011	MARYLAND DEPARTMENT OF ENVIRONMENT WATER MANAGEMENT ADMINISTRATION

DETAIL F-3 PORTABLE SEDIMENT TANK

STANDARD SYMBOL: PST

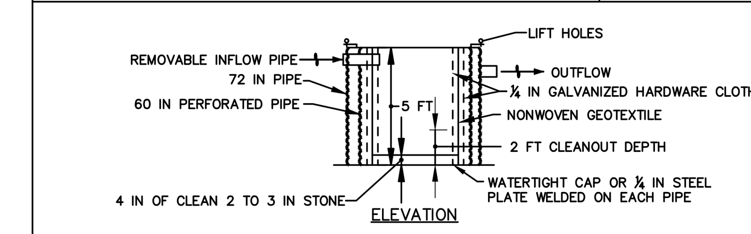

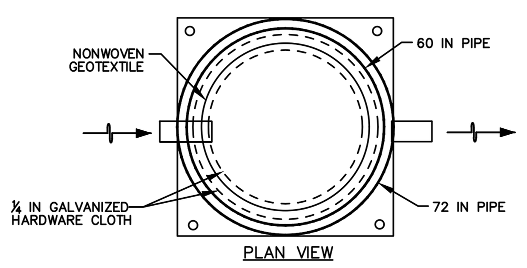

CONSTRUCTION SPECIFICATIONS

1. PROVIDE 1 CUBIC FOOT OF STORAGE FOR EACH GALLON PER MINUTE OF PUMP CAPACITY. REQUIRED STORAGE VOLUME MAY BE ATTAINED BY PLACEMENT OF TANKS IN PARALLEL WITH INFLOW EVENLY DISTRIBUTED AMONG TANKS. OVERTOPPING OF TANKS IS NOT PERMITTED.
2. USE 60 INCH CORRUGATED METAL OR PLASTIC PIPE WITH 1 INCH DIAMETER PERFORATIONS, 6 INCHES ON CENTER FOR THE INNER PIPE. LINE PIPE WITH NONWOVEN GEOTEXTILE, AS SPECIFIED IN SECTION H-1 MATERIALS, SANDWICHED BETWEEN, AND ATTACHED TO, ¼ INCH HARDWARE CLOTH.
3. OVERLAP GEOTEXTILE 8 INCHES MINIMUM AT VERTICAL SEAM AND AT THE BOTTOM PLATE.
4. ANCHOR GEOTEXTILE AT BOTTOM OF TANK WITH 4 INCHES OF 2 TO 3 INCH CLEAN STONE OR EQUIVALENT RECYCLED CONCRETE.
5. USE 72 INCH CORRUGATED METAL OR PLASTIC OUTER PIPE WITH PERMANENT OUTFLOW PIPE WITH INVERT LOWER THAN INFLOW PIPE
6. INFLOW PIPE MUST DISCHARGE INTO INNER PIPE AND BE REMOVABLE.
7. PLACE TANK ON LEVEL SURFACE AND DISCHARGE TO A STABLE AREA AT A NONEROSIVE RATE.
8. A PORTABLE SEDIMENT TANK REQUIRES FREQUENT MAINTENANCE. REMOVE ACCUMULATED SEDIMENT FROM INNER PIPE WHEN IT REACHES TWO FEET IN DEPTH. IF SYSTEM CLOGS, PULL OUT INNER PIPE, REMOVE ACCUMULATED SEDIMENT, AND REPLACE GEOTEXTILE. KEEP POINT OF DISCHARGE FREE OF EROSION.

MARYLAND STANDARDS AND SPECIFICATIONS FOR SOIL EROSION AND SEDIMENT CONTROL

U.S. DEPARTMENT OF AGRICULTURE NATURAL RESOURCES CONSERVATION SERVICE	2011	MARYLAND DEPARTMENT OF ENVIRONMENT WATER MANAGEMENT ADMINISTRATION

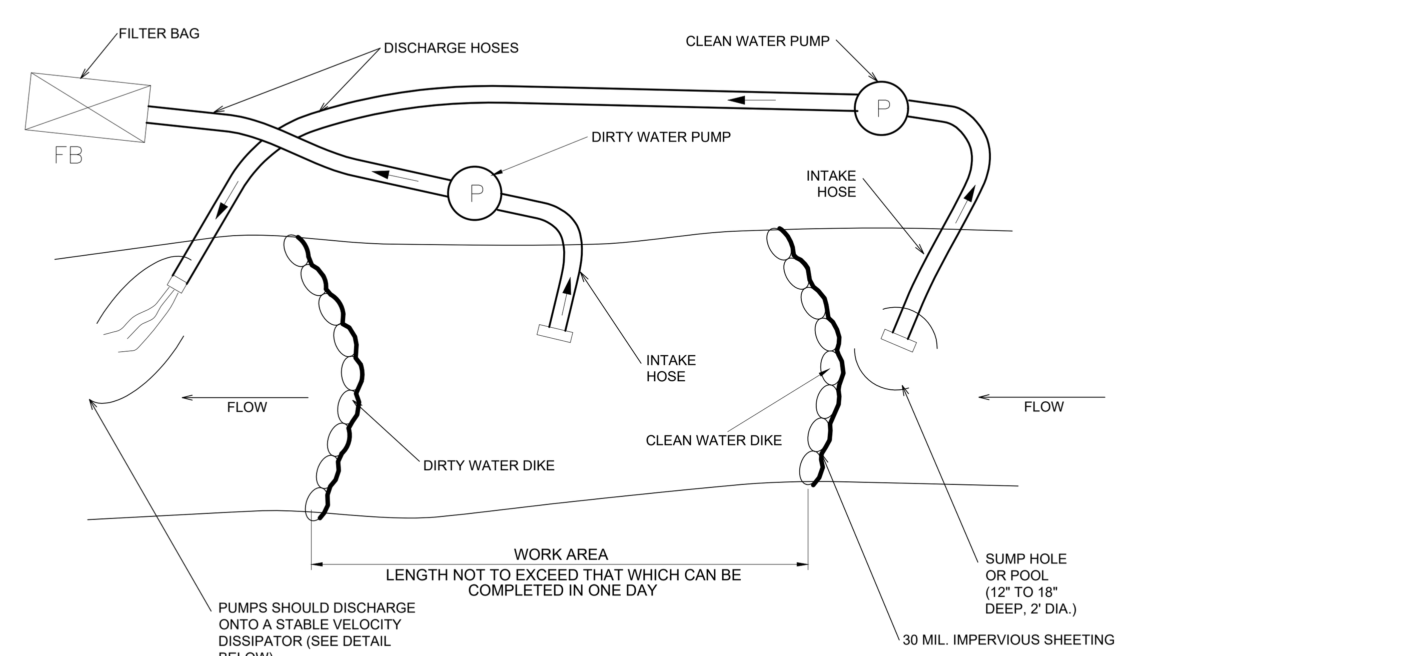

SANDBAG DIVERSION, WITH PUMP AROUND PRACTICE - PLAN VIEW

NOT TO SCALE

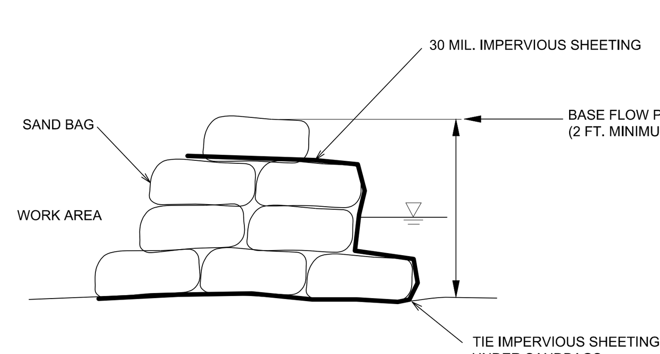

SANDBAG DIVERSION, WITH PUMP AROUND PRACTICE - TYPICAL CROSS SECTION

NOT TO SCALE

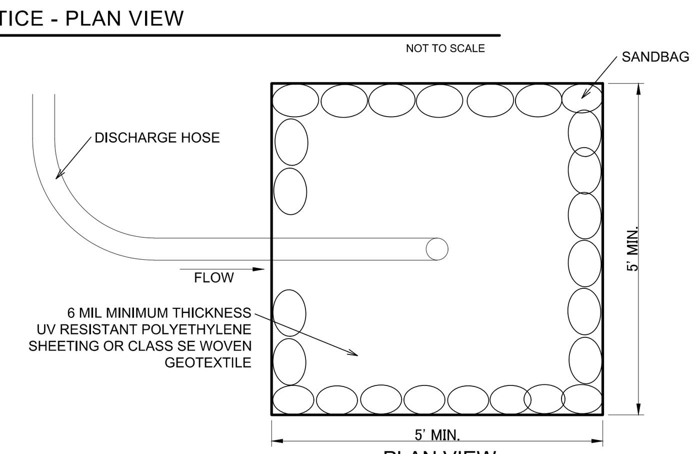

NOTES:
1. PLACE DISCHARGE HOSE IN CENTER OF OUTLET PROTECTION.
2. OUTLET PROTECTION SHALL BE LOCATED INSIDE THE LOD.

OUTLET PROTECTION (OP)

NOT TO SCALE

MGWC 1.2: PUMP-AROUND PRACTICE

DESCRIPTION THE WORK SHALL CONSIST OF INSTALLING A TEMPORARY PUMP AROUND AND SUPPORTING MEASURES TO DIVERT FLOW AROUND INSTREAM CONSTRUCTION SITES.

IMPLEMENTATION SEQUENCE SEDIMENT CONTROL MEASURES, PUMP-AROUND PRACTICES, AND ASSOCIATED CHANNEL AND BANK CONSTRUCTION SHALL BE COMPLETED IN THE FOLLOWING SEQUENCE (REFER TO DETAIL 1.2):

1. CONSTRUCTION ACTIVITIES INCLUDING THE INSTALLATION OF EROSION AND SEDIMENT CONTROL MEASURES SHALL NOT BEGIN UNTIL ALL NECESSARY EASEMENTS AND/OR RIGHT-OF-WAYS HAVE BEEN ACQUIRED. ALL EXISTING UTILITIES SHALL BE MARKED IN THE FIELD PRIOR TO CONSTRUCTION. THE CONTRACTOR IS RESPONSIBLE FOR ANY DAMAGE TO EXISTING UTILITIES THAT MAY RESULT FROM CONSTRUCTION AND SHALL REPAIR THE DAMAGE AT HIS/HER OWN EXPENSE TO THE COUNTY'S OR UTILITY COMPANY'S SATISFACTION.

2. THE CONTRACTOR SHALL NOTIFY THE MARYLAND DEPARTMENT OF THE ENVIRONMENT OR WMA SEDIMENT CONTROL INSPECTOR AT LEAST 5 DAYS BEFORE BEGINNING CONSTRUCTION. ADDITIONALLY, THE CONTRACTOR SHALL INFORM THE LOCAL ENVIRONMENTAL PROTECTION AND RESOURCE MANAGEMENT INSPECTION AND ENFORCEMENT DIVISION AND THE PROVIDER OF LOCAL UTILITIES A MINIMUM OF 48 HOURS BEFORE STARTING CONSTRUCTION.

3. THE CONTRACTOR SHALL CONDUCT A PRE-CONSTRUCTION MEETING ON SITE WITH THE WMA SEDIMENT CONTROL INSPECTOR, THE COUNTY PROJECT MANAGER, AND THE ENGINEER TO REVIEW LIMITS OF DISTURBANCE, EROSION AND SEDIMENT CONTROL REQUIREMENTS, AND THE SEQUENCE OF CONSTRUCTION. THE CONTRACTOR SHALL STAKE OUT ALL LIMITS OF DISTURBANCE PRIOR TO THE PRE-CONSTRUCTION MEETING SO THEY MAY BE REVIEWED. THE PARTICIPANTS WILL ALSO DESIGNATE THE CONTRACTOR'S STAGING AREAS AND FLAG ALL TREES WITHIN THE LIMIT OF DISTURBANCE WHICH WILL BE REMOVED FOR CONSTRUCTION ACCESS. TREES SHALL NOT BE REMOVED WITHIN THE LIMIT OF DISTURBANCE WITHOUT APPROVAL FROM THE WMA OR LOCAL AUTHORITY.

4. CONSTRUCTION SHALL NOT BEGIN UNTIL ALL SEDIMENT AND EROSION CONTROL MEASURES HAVE BEEN INSTALLED AND APPROVED BY THE ENGINEER AND THE SEDIMENT CONTROL INSPECTOR. THE CONTRACTOR SHALL STAY WITHIN THE LIMITS OF THE DISTURBANCE AS SHOWN ON THE PLANS AND MINIMIZE DISTURBANCE WITHIN THE WORK AREA WHENEVER POSSIBLE.

5. UPON INSTALLATION OF ALL SEDIMENT CONTROL MEASURES AND APPROVAL BY THE SEDIMENT CONTROL INSPECTOR AND THE LOCAL ENVIRONMENTAL PROTECTION AND RESOURCE MANAGEMENT INSPECTION AND ENFORCEMENT DIVISION, THE CONTRACTOR SHALL BEGIN WORK AT THE UPSTREAM SECTION AND PROCEED DOWNSTREAM BEGINNING WITH THE ESTABLISHMENT OF STABILIZED CONSTRUCTION ENTRANCES. IN SOME CASES, WORK MAY BEGIN DOWNSTREAM IF APPROPRIATE. THE SEQUENCE OF CONSTRUCTION MUST BE FOLLOWED UNLESS THE CONTRACTOR GETS WRITTEN APPROVAL FOR DEVIATIONS FROM THE WMA OR LOCAL AUTHORITY. THE CONTRACTOR SHALL ONLY BEGIN WORK IN AN AREA WHICH CAN BE COMPLETED BY THE END OF THE DAY INCLUDING GRADING ADJACENT TO THE CHANNEL. AT THE END OF EACH WORK DAY, THE WORK AREA MUST BE STABILIZED AND THE PUMP AROUND REMOVED FROM THE CHANNEL. WORK SHALL NOT BE CONDUCTED IN THE CHANNEL DURING RAIN EVENTS.

6. SANDBAG DIKES SHALL BE SITUATED AT THE UPSTREAM AND DOWNSTREAM ENDS OF THE WORK AREA AS SHOWN ON THE PLANS, AND STREAM FLOW SHALL BE PUMPED AROUND THE WORK AREA. THE PUMP SHALL DISCHARGE ONTO A STABLE VELOCITY DISSIPATER MADE OF RIPRAP OR SANDBAGS. TEMPORARY MEASURE FOR DEWATERING INCHANNEL CONSTRUCTION SITES.

7. WATER FROM THE WORK AREA SHALL BE PUMPED TO A SEDIMENT FILTERING MEASURE SUCH AS A DEWATERING BASIN, SEDIMENT BAG, OR OTHER APPROVED SOURCE. THE MEASURE SHALL BE LOCATED SUCH THAT THE WATER DRAINS BACK INTO THE CHANNEL BELOW THE DOWNSTREAM SANDBAG DIKE.

8. TRAVERSING A CHANNEL REACH WITH EQUIPMENT WITHIN THE WORK AREA WHERE NO WORK IS PROPOSED SHALL BE AVOIDED. IF EQUIPMENT HAS TO TRAVERSE SUCH A REACH FOR ACCESS TO ANOTHER AREA, THEN TIMBER MATS OR SIMILAR MEASURES SHALL BE USED TO MINIMIZE DISTURBANCE TO THE CHANNEL. TEMPORARY STREAM CROSSINGS SHALL BE USED ONLY WHEN NECESSARY AND SHALL BE USED ONLY WHERE NOTED ON THE PLANS OR SPECIFIED. (SEE SECTION 4, STREAM CROSSINGS, MARYLAND GUIDELINES TO WATERWAY CONSTRUCTION).

9. ALL STREAM RESTORATION MEASURES SHALL BE INSTALLED AS INDICATED BY THE PLANS AND ALL BANKS GRADED IN ACCORDANCE WITH THE GRADING PLANS AND TYPICAL CROSS-SECTIONS. ALL GRADING MUST BE STABILIZED AT THE END OF EACH DAY WITH SEED AND MULCH OR SEED AND MATTING AS SPECIFIED ON THE PLANS.

10. AFTER AN AREA IS COMPLETED AND STABILIZED, THE CLEAN WATER DIKE SHALL BE REMOVED. AFTER THE FIRST SEDIMENT FLUSH, A NEW CLEAN WATER DIKE SHALL BE ESTABLISHED UPSTREAM FROM THE OLD SEDIMENT DIKE. FINALLY, UPON ESTABLISHMENT OF A NEW SEDIMENT DIKE BELOW THE OLD ONE, THE OLD SEDIMENT DIKE SHALL BE REMOVED.

11. A PUMP AROUND MUST BE INSTALLED ON ANY TRIBUTARY OR STORM DRAIN OUTFALL WHICH CONTRIBUTES BASEFLOW TO THE WORK AREA. THIS SHALL BE ACCOMPLISHED BY LOCATING A SANDBAG DIKE AT THE DOWNSTREAM END OF THE TRIBUTARY OR STORM DRAIN OUTFALL AND PUMPING THE STREAM FLOW AROUND THE WORK AREA. THIS WATER SHALL DISCHARGE ONTO THE SAME VELOCITY DISSIPATER USED FOR THE MAIN STEM PUMP AROUND.

12. IF A TRIBUTARY IS TO BE RESTORED, CONSTRUCTION SHALL TAKE PLACE ON THE TRIBUTARY BEFORE WORK ON THE MAIN STEM REACHES THE TRIBUTARY CONFLUENCE. CONSTRUCTION IN THE TRIBUTARY, INCLUDING PUMP AROUND PRACTICES, SHALL FOLLOW THE SAME SEQUENCE AS FOR THE MAIN STEM OF THE RIVER OR STREAM. WHEN CONSTRUCTION ON THE TRIBUTARY IS COMPLETED, WORK ON THE MAIN STEM SHALL RESUME. WATER FROM THE TRIBUTARY SHALL CONTINUE TO BE PUMPED AROUND THE WORK AREA IN THE MAIN STEM.

13. THE CONTRACTOR IS RESPONSIBLE FOR PROVIDING ACCESS TO AND MAINTAINING ALL EROSION AND SEDIMENT CONTROL DEVICES UNTIL THE SEDIMENT CONTROL INSPECTOR APPROVES THEIR REMOVAL.

14. AFTER CONSTRUCTION, ALL DISTURBED AREAS SHALL BE REGRADED AND REVEGETATED AS PER THE PLANTING PLAN.

15. IF, IN THE JUDGMENT OF THE ENGINEER, INADEQUATE ENERGY DISSIPATION OR CHANNEL BED EROSION IS OCCURRING, THE CONTRACTOR SHALL BE REQUIRED TO INCREASE THE MATERIAL OR PLACEMENT SIZE OF THE OUTFALL PROTECTION AT THE DIRECTION OF THE ENGINEER.

16. THE CONDITION OF THE OUTLET PROTECTION SANDBAGS IS TO BE CHECKED TWICE PER DAY (START OF WORK DAY AND MID-DAY) TO ENSURE THAT SAND IS NOT ESCAPING BAGS. DAMAGED OR LEAKING BAGS ARE TO BE REMOVED AND REPLACED.

17. OUTFALL PROTECTION MATERIALS AND GEOTEXTILE SHALL BE REMOVED FROM THE CHANNEL AT THE COMPLETION OF EACH CONSTRUCTION STAGE.

DETAIL H-6 ONSITE CONCRETE WASHOUT STRUCTURE

STANDARD SYMBOL: CWS

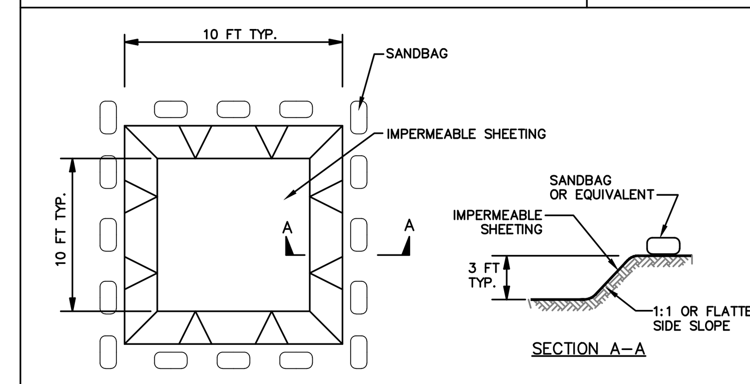

EXCAVATED WASHOUT STRUCTURE

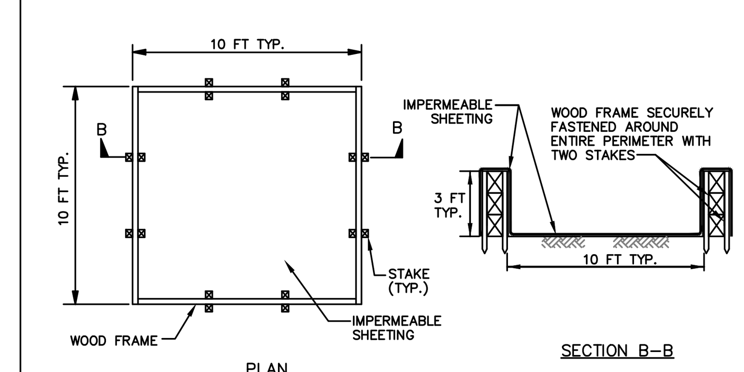

WASHOUT STRUCTURE WITH WOOD PLANKS

1 OF 2

MARYLAND STANDARDS AND SPECIFICATIONS FOR SOIL EROSION AND SEDIMENT CONTROL

U.S. DEPARTMENT OF AGRICULTURE NATURAL RESOURCES CONSERVATION SERVICE	2011	MARYLAND DEPARTMENT OF ENVIRONMENT WATER MANAGEMENT ADMINISTRATION

DETAIL H-6 ONSITE CONCRETE WASHOUT STRUCTURE

STANDARD SYMBOL: CWS

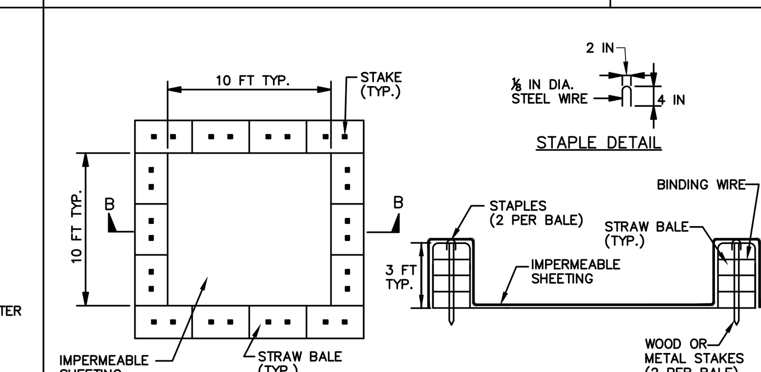

NOTE: CAN BE TWO STACKED BALES OR PARTIALLY EXCAVATED TO REACH 3 FT DEPTH

WASHOUT STRUCTURE WITH STRAW BALES

CONSTRUCTION SPECIFICATIONS

1. LOCATE WASHOUT STRUCTURE A MINIMUM OF 50 FEET AWAY FROM OPEN CHANNELS, STORM DRAIN INLETS, SENSITIVE AREAS, WETLANDS, BUFFERS AND WATER COURSES AND AWAY FROM CONSTRUCTION TRAFFIC.
2. SIZE WASHOUT STRUCTURE FOR VOLUME NECESSARY TO CONTAIN WASH WATER AND SOLIDS AND MAINTAIN AT LEAST 4 INCHES OF FREEBOARD. TYPICAL DIMENSIONS ARE 10 FEET X 10 FEET X 3 FEET DEEP.
3. PREPARE SOIL BASE FREE OF ROCKS OR OTHER DEBRIS THAT MAY CAUSE TEARS OR HOLES IN THE LINER. FOR LINER, USE 10 MIL OR THICKER UV RESISTANT, IMPERMEABLE SHEETING, FREE OF HOLES AND TEARS OR OTHER DEFECTS THAT COMPROMISE IMPERMEABILITY OF THE MATERIAL.
4. PROVIDE A SIGN FOR THE WASHOUT IN CLOSE PROXIMITY TO THE FACILITY.
5. KEEP CONCRETE WASHOUT STRUCTURE WATER TIGHT. REPLACE IMPERMEABLE LINER IF DAMAGED (E.G., RIPPED OR PUNCTURED). EMPTY OR REPLACE WASHOUT STRUCTURE THAT IS 75 PERCENT FULL, AND DISPOSE OF ACCUMULATED MATERIAL PROPERLY. DO NOT REUSE PLASTIC LINER. WET-VACUUM STORED LIQUIDS THAT HAVE NOT EVAPORATED AND DISPOSE OF IN AN APPROVED MANNER. PRIOR TO FORECASTED RAINSTORMS, REMOVE LIQUIDS OR COVER STRUCTURE TO PREVENT OVERFLOWS. REMOVE HARDENED SOLIDS, WHOLE OR BROKEN UP, FOR DISPOSAL OR RECYCLING. MAINTAIN RUNOFF DIVERSION AROUND EXCAVATED WASHOUT STRUCTURE UNTIL STRUCTURE IS REMOVED.

2 OF 2

MARYLAND STANDARDS AND SPECIFICATIONS FOR SOIL EROSION AND SEDIMENT CONTROL

U.S. DEPARTMENT OF AGRICULTURE NATURAL RESOURCES CONSERVATION SERVICE	2011	MARYLAND DEPARTMENT OF ENVIRONMENT WATER MANAGEMENT ADMINISTRATION

T:\2020\TRANSPORTATION\171166.10 CARROLL CO BRYNWOOD STORM DRAIN IMPROVEMENTS\CADD\PED-P000_BRYNWOOD.DWG

OWNER / DEVELOPER:

CARROLL COUNTY
DEPARTMENT OF LAND AND RESOURCE MANAGEMENT
BUREAU OF RESOURCE MANAGEMENT
225 N. CENTER ST
WESTMINSTER, MARYLAND 21157-5194
PHONE: 410.386.2668

LAND OWNERS:

RICHARD J. & MARY L. GULAS
5812 MIRIAM DRIVE - LOT 39
PARCEL: 0575 TAX MAP: 0073 GRID: 0004

JOHN S. & DEBORAH A. BOEHL
5814 MIRIAM DRIVE - LOT 40
PARCEL: 0576 TAX MAP: 0073 GRID: 0004

LYNN E. GRAHAM
5807 MIRIAM DRIVE - LOT 58
PARCEL: 0576 TAX MAP: 0073 GRID: 0004

ELAINE M. ROSS
5811 MIRIAM DRIVE - LOT 57
PARCEL: 0575 TAX MAP: 0073 GRID: 0004

MARY M. & KATHLEEN W. REYNOLDS
5830 MIRIAM DRIVE - LOT "PARCEL I"
PARCEL: 0575 TAX MAP: 0073 GRID: 0004

JEFFREY D. CREUTZER & KAREN M. HILNBRAND
1107 COURTLAND DRIVE - LOT 18A
PARCEL: 0575 TAX MAP: 0073 GRID: 0004

JOSEPH W. & LISA V. THORPE
1105 COURTLAND DRIVE - LOT 19A
PARCEL: 0575 TAX MAP: 0073 GRID: 0004

TIMOTHY & BRITTANY BECK
1103 COURTLAND DRIVE - LOT 20A
PARCEL: 0575 TAX MAP: 0073 GRID: 0004

WAYNE & LORI HOWES
1104 JOHNSVILLE ROAD - LOT 2A
PARCEL: 0575 TAX MAP: 0073 GRID: 0004

MARK L. & JILL E. MARCIANTE
1102 JOHNSVILLE ROAD - LOT 1A
PARCEL: 0575 TAX MAP: 0073 GRID: 0004

REVISIONS

NO.	DATE	DESCRIPTION

CENTURY ENGINEERING
CONSULTING ENGINEERS - PLANNERS
10710 GILROY ROAD
HUNT VALLEY, MARYLAND 21031
PHONE: (443) 589-2400 FAX: (443) 589-2401

CARROLL COUNTY BRYNWOOD STORM DRAIN IMPROVEMENTS

FINAL DESIGN

TITLE:

EROSION & SEDIMENT CONTROL DETAILS

COUNTY FILE NO: GRO-20-0009	SCALE: N.T.S.	DATE: 1/13/2023
SEAL:	DESIGN: AW	CHECK: TT
	DWG NO: ED-01 OF ED-01	
	SHEET NO: 15 OF 17	

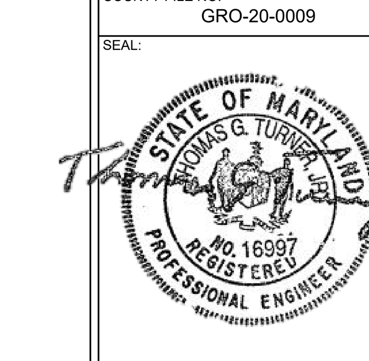

I HEREBY CERTIFY THAT THESE DOCUMENTS WERE PREPARED OR APPROVED BY ME, AND THAT I AM A DULY LICENSED PROFESSIONAL ENGINEER UNDER THE LAWS OF THE STATE OF MARYLAND.

LICENSE #: 16997 EXPIRES: 7/19/2024

SEDIMENT AND EROSION CONTROL NOTES

1. ALL EROSION/SEDIMENT CONTROL MEASURES SHALL COMPLY WITH THE "MARYLAND STANDARDS AND SPECIFICATIONS FOR SOIL EROSION AND SEDIMENT CONTROL" BY THE MARYLAND DEPARTMENT OF THE ENVIRONMENT, WATER MANAGEMENT ADMINISTRATION IN ASSOCIATION WITH THE NATURAL RESOURCES CONSERVATION SERVICE AND THE MARYLAND ASSOCIATION OF SOIL CONSERVATION DISTRICTS (REFERENCED AS THE 2011 STANDARDS AND SPECS).
2. AREAS THAT HAVE BEEN CLEARED AND/OR GRADED, BUT WILL NOT BE CONSTRUCTED ON OR PERMANENTLY VEGETATED FOR MORE THAN 5 DAYS (3 DAYS FOR SEDIMENT CONTROL MEASURES AND FOR STEEP SLOPES) MUST BE STABILIZED WITH MULCH OR TEMPORARY STABILIZATION. ANY AREAS THAT ARE IN TEMPORARY VEGETATION FOR OVER 6 MONTHS WILL NEED TO BE PERMANENTLY VEGETATED.
3. FOR SPECIFICATIONS ON PERMANENT OR TEMPORARY STABILIZATION, SEE B-4-4 AND B-4-5.
4. MULCHING ONLY IS RESTRICTED TO USE ON DISTURBED AREAS AS A TEMPORARY COVER WHERE VEGETATION IS NOT FEASIBLE OR WHERE SEEDING GERMINATION CANNOT BE COMPLETED BECAUSE OF WEATHER CONDITIONS. FOR SPECIFICATIONS SEE B-4-3, A.1.B
5. FOR SPECIFICATIONS ON THE STABILIZATION OF CUT AND FILL SLOPES STEEPER THAN 3 HORIZONTAL TO 1 VERTICAL, SEE INCREMENTAL STABILIZATION B-4-1
6. FURNISHED TOPSOIL MUST MEET THE MINIMUM SPECIFICATION OF MDOT SHA 920.01.02.
7. THE REQUIRED SEQUENCE OF CONSTRUCTION MUST BE FOLLOWED DURING SITE DEVELOPMENT. ANY CHANGES IN THE SEQUENCE OF CONSTRUCTION MUST BE APPROVED BY THE SOIL CONSERVATION DISTRICT.
8. ANY REVISIONS TO THE SEDIMENT CONTROL PLAN, NOT COVERED UNDER THE LIST OF PLAN MODIFICATIONS THAT CAN BE APPROVED BY THE SEDIMENT CONTROL INSPECTOR, NEED TO BE SUBMITTED TO THE SOIL CONSERVATION DISTRICT FOR APPROVAL.
9. NO PROPOSED SLOPE THAT IS REQUIRED TO BE SEEDED AND/OR MULCHED SHALL BE STEEPER THAN 2:1. SLOPES STEEPER THEN 2:1 SHALL REQUIRE A ENGINEERED DESIGN FOR STABILIZATION
10. ALL SEDIMENT CONTROL STRUCTURES WILL BE INSPECTED ONCE A WEEK AND AFTER EACH RAINFALL AND WILL BE REPAIRED, AS NEEDED, SO THAT THE STRUCTURE MEETS THE MINIMUM SPECIFICATIONS AS SHOWN IN THE 2011 STANDARDS AND SPECS.
11. THE CONTRACTOR IS RESPONSIBLE FOR MAINTAINING ALL SEDIMENT AND EROSION CONTROL MEASURES UNTIL THE DISTURBED AREAS ARE PERMANENTLY STABILIZED.
12. THE DISTRICT APPROVAL FOR THIS SEDIMENT CONTROL PLAN IS GOOD FOR 2 YEARS. AT THE END OF 2 YEARS, IF CONSTRUCTION OF THE PLAN HAS NOT STARTED, THE PLAN WILL NEED TO BE RESUBMITTED TO THE SOIL CONSERVATION DISTRICT FOR REVIEW AND RE-APPROVAL. ANY PLANS THAT ARE CURRENTLY UNDER CONSTRUCTION AFTER 2 YEARS MAY BE REQUIRED TO BE RESUBMITTED TO THE SOIL CONSERVATION DISTRICT BY THE SEDIMENT CONTROL INSPECTOR.

DUST CONTROL SCHEDULE

MAY-OCTOBER - ALL GRADED AREAS NOT BEING IMMEDIATELY STABILIZED AS NOTED IN THE "REQUIRED SEQUENCE OF CONSTRUCTION" SHALL BE WATERED ON A CONTINUING BASIS AS NECESSARY TO PROVIDE FOR DUST PROOFING. CONTRACTOR SHALL PROVIDE TANK TRUCK WITH SPRAY BAR ON SITE AT ANY TIME THE DISTURBED AREA EXCEEDS THREE (3) ACRES.

SITE ANALYSIS*

1. TOTAL AREA OF SITE: 0.94 AC
2. AREA DISTURBED: 0.94 AC
3. TOTAL CUT: 2,165 CY
4. TOTAL FILL: 2,235 CY

* QUANTITIES SHOWN IN THE SITE ANALYSIS ABOVE ARE NOT FOR BIDDING PURPOSES

STABILIZATION SPECIFICATIONS

TEMPORARY SEEDING NOTES

SCOPE: PLANTING SHORT TERM (NO MORE THAN 6 MONTHS) VEGETATION TO TEMPORARILY STABILIZE ANY AREAS WHERE SOIL DISTURBANCE HAS OCCURRED, UNTIL THE AREA CAN BE PERMANENTLY STABILIZED WITH VEGETATIVE OR NON-VEGETATIVE PRACTICES.

STANDARDS: THE FOLLOWING NOTES SHALL CONFORM TO SECTION B-4 OF THE"2011 MARYLAND STANDARDS AND SPECIFICATIONS FOR SOIL EROSION AND SEDIMENT CONTROL" PUBLISHED JOINTLY BY THE MARYLAND DEPARTMENT OF ENVIRONMENT - WATER MANAGEMENT ADMINISTRATION, THE NATIONAL RESOURCE CONSERVATION SERVICE AND THE MARYLAND ASSOCIATION OF SOIL CONSERVATION DISTRICTS

1. THE SEED BED SHALL BE PREPARED BY LOOSENING THE SOIL TO A DEPTH OF 3 TO 5 INCHES AND INCORPORATING THE LIME AND FERTILIZER INTO THIS LOOSENED LAYER OF SOIL. SEE SECTION B-4-2

2. FOR TEMPORARY STABILIZATION, FERTILIZER SHALL CONSIST OF A MIXTURE OF 10-20-20 AND BE APPLIED AT A RATE OF 436 LB. PER ACRE (10 LB. PER 1000 SQ. FT.) AND WILL MEET THE REQUIREMENTS IN SECTION B-4-2. LIME SHALL BE APPLIED AT A RATE OF 2 TONS PER ACRE (90 LB. PER SQ. FT.) AND SHALL MEET THE REQUIREMENTS IN SECTION B-4-2 AND B-4-4

3. SEED TYPE AND APPLICATION SHALL MEET THE REQUIREMENTS IN SECTION B-4-3 SEED TAGS SHALL BE MADE AVAILABLE TO THE INSPECTOR TO VERIFY THE TYPE AND RATE OF SEED USED.
MULCH TYPE AND ITS APPLICATION WILL MEET THE REQUIREMENTS IN SECTION B-4-3 A, B AND C AND WILL BE APPLIED ALONG WITH THE SEED OR IMMEDIATELY AFTER SEEDING

4. SEEDING MIXTURES SHALL BE SELECTED FROM OR WILL BE EQUAL TO THOSE ON TABLE B.1 (PAGE B.20).

TEMPORARY SEEDING SUMMARY

TEMPORARY SEEDING SUMMARY						
SEED MIXTURE (HARDINESS ZONE 6B) FROM TABLE B.1					FERTILIZER RATE (10-10-10)	LIME RATE
NO.	SPECIES	APPLICATION RATE (LB/AC.)	SEEDING DATES	SEEDING DEPTHS		
1	ANNUAL RYEGRASS	40	1 MARCH TO 31 MAY 1 AUG. TO 15 OCT.	1"	436 LB/AC (10 LB/1,000 SF)	2 TONS/AC (90 LB/1000 SF)
2	BARLEY	96	1 MARCH TO 31 MAY 1 AUG. TO 15 OCT.	1/2"	436 LB/AC (10 LB/1,000 SF)	2 TONS/AC (90 LB/1000 SF)
3	FOXTAIL MILLET	30	16 MAY TO 31 JULY	1/2"	436 LB/AC (10 LB/1,000 SF)	2 TONS/AC (90 LB/1000 SF)

NOTE: IF PERMANENT STABILIZATION IS REQUIRED OUTSIDE OF SPECIFIED SEEDING DATES, THE CONTRACTOR SHALL PROVIDE TEMPORARY STABILIZATION MEASURES (SEED AND MULCH) UNTIL THE APPROPRIATE SEEDING DATES FOR THE SPECFIED SEED MIXES OCCUR. THE CONTRACTOR SHALL PROVIDE PERMANENT STABILIZATION SEEDING WITHIN THE SPECIFIED SEEDING DATES.

PERMANENT SEEDING NOTES

SCOPE: PLANTING PERMANENT, LONG LIVED VEGETATIVE COVER ON GRADED AND/OR CLEARED AREAS AND AREAS THAT HAVE BEEN IN TEMPORARY VEGETATION FOR MORE THAN 6 MONTHS.

STANDARDS: THE FOLLOWING NOTES SHALL CONFORM TO SECTION B-4 OF THE "2011 MARYLAND STANDARDS AND SPECIFICATIONS FOR SOIL EROSION AND SEDIMENT CONTROL" PUBLISHED JOINTLY BY THE MARYLAND DEPARTMENT OF ENVIRONMENT - WATER MANAGEMENT ADMINISTRATION, THE NATIONAL RESOURCE CONSERVATION SERVICE AND THE MARYLAND ASSOCIATION OF SOIL CONSERVATION DISTRICTS.

THE SEED BED SHALL BE PREPARED BY LOOSENING THE SOIL TO A DEPTH OF 3 TO 5 INCHES AND INCORPORATING THE LIME AND FERTILIZER INTO THIS LOOSENED LAYER OF SOIL. SEE SECTION B-4-2.

FOR SITES OVER 5 AC. SOIL TESTS WILL BE PERFORMED. SOIL TESTS WILL BE CONDUCTED BY THE UNIVERSITY OF MARYLAND OR A RECOGNIZED COMMERCIAL LABORATORY. MINIMUM SOIL CONDITIONS SHALL MEET THE REQUIREMENTS OF SECTION B-4-2-A-2-A, OTHERWISE SOIL AMENDMENTS OR TOPSOIL WILL NEED TO BE APPLIED. TOPSOILING MAY OCCUR WHEN SOIL CONDITIONS MEET THE MINIMUM REQUIREMENTS AS STATED IN SECTION B-4-2-B. SOIL AMENDMENTS MUST MEET THE REQUIREMENTS AS SET FORTH IN SECTION B-4-2-C AND MUST BE APPLIED AS INDICATED BY THE SOILS TESTS.

FOR SITES OF 5 AC. OR LESS OF DISTURBANCE, THE FOLLOWING FERTILIZER AND LIME RATES SHALL APPLY.
FERTILIZER SHALL CONSIST OF A MIXTURE OF 10-20-20 AND BE APPLIED AT THE FOLLOWING RATES:
N = 45 LB. PER ACRE (1 LB. PER 1000 SQ.FT.) P205 = 90 LB. PER ACRE (2 LB. PER 1000 SQ.FT.)
K20 = 90 LB. PER ACRE (2 LB. PER 1000 SQ.FT.)
LIME SHALL BE APPLIED AT A RATE OF 2 TONS PER ACRE (90 LB. PER 1000 SQ.FT.)

SEED TYPE, TURFGRASS OR SOD APPLICATION SHALL MEET THE REQUIREMENTS IN SECTION B-4-5. SEED TAGS SHALL BE MADE AVAILABLE TO THE INSPECTOR TO VERIFY THE TYPE AND APPLICATION RATE OF SEED USED. MULCH TYPE AND ITS APPLICATION WILL MEET THE REQUIREMENTS IN SECTION B-4-3 A, B AND C, AND WILL BE APPLIED ALONG WITH SEED OR IMMEDIATELY AFTER SEEDING

SEEDING MIXTURES SHALL BE SELECTED FROM OR WILL BE EQUAL TO THOSE ON TABLE B-3. THE SEEDING CHART BELOW WILL NEED TO BE PLACED ON AND FILLED IN ON THE SEDIMENT CONTROL PLAN

PERMANENT SEEDING SUMMARY								
SEED MIXTURE (HARDINESS ZONE 6B) FROM TABLE B.3					FERTILIZER RATE (10-20-20)			LIME RATE
NO.	SPECIES	APPLICATION RATE (LB/AC.)	SEEDING DATES	SEEDING DEPTHS	N	P2O5	K2O	
1	SWITCH GRASS	120	1 MARCH TO 15 MAY; 16 MAY TO 15 JUNE WITH ADDITIONAL WATERING	1/4" TO 1/2"	45LB/AC (1 LB/1,000 SF)	90 LB/AC (2 LB/1,000 SF)	90 LB/AC (2 LB/1,000 SF)	2 TONS/AC (90 LB/1000 SF)
	CREEPING RED FESCUE	181						
	PARTRIDGE PEA	49						
3	DEER TONGUE	131						
	CREEPING RED FESCUE	175						
	VIRGINIA WILD RYE	43						
9	TALL FESCUE	175	15 AUGUST TO 15 OCTOBER					
	KENTUCKY BLUEGRASS	117						
	PERENNIAL RYE	58						

SEQUENCE OF CONSTRUCTION AND INSPECTION CHART

CONTRACTOR SHALL REFER TO INSPECTING AGENT COLUMN TO SEE WHO IS RESPONSIBLE FOR INSPECTING EACH ITEM OF THIS PROJECT.
NOTE: INSPECTION CHART SHALL BE SIGNED BY CERTIFYING PROFESSIONAL AS WORK PROGRESSES. ONCE CERTIFYING PROFESSIONAL HAS GIVEN APPROVAL, PROCEED AS NOTED BELOW.
NOTE: PLEASE NOTIFY CERTIFYING ENGINEER 48-HOURS PRIOR TO COMMENCING CONSTRUCTION (CENTURY ENGINEERING - 443.589.2400).
ENGINEER: CENTURY ENGINEERING - 443.589.2400
COUNTY AGENT CONTACT NUMBER: 410.386.2210

PHASE 1 (PR-I-101 TO PR-EW-109 & PR-I-104 TO PR-I-103)	CERTIFYING PROFESSIONALS		
	INITIALS	DATE	INSPECTING AGENT
1. CONTACT THE CARROLL COUNTY DEPARTMENT OF PUBLIC WORKS (DPW) CONSTRUCTION INSPECTION DIVISION AT 410-386-2157 THREE (3) WORKING DAYS IN ADVANCE OF ANY CONSTRUCTION ON OR ADJACENT TO A COUNTY ROAD, INCLUDING INSTALLATION OF TRAFFIC CONTROL DEVICES.			COUNTY
2. CONTACT THE CARROLL COUNTY SEDIMENT CONTROL INSPECTOR (410-386-2210) 24 HOURS PRIOR TO DOING ANY WORK ON THE SITE TO SET-UP PRE-CONSTRUCTION MEETING AND TO MAKE SURE ALL LOCAL ORDINANCE ITEMS HAVE BEEN SATISFIED. THE LIMIT OF DISTURBANCE (LOD) AND TREES TO BE REMOVED OR PROTECTED ARE TO BE MARKED IN THE FIELD PRIOR TO THE PRE-CONSTRUCTION MEETING FOR REVIEW AND APPROVAL.			COUNTY
3. CLEAR AND GRUB FOR AND INSTALL THE TEMPORARY ORANGE CONSTRUCTION FENCING, STABILIZED CONSTRUCTION ENTRANCES, PUMP AROUND PRACTICE FOR IN-STREAM CONSTRUCTION, SANDBAG DIKES, PORTABLE SEDIMENT TANK(S), AND CLEAR WATER DIVERSION PIPE AS NECESSARY TO PERFORM PHASE 1 WORK AND AS SHOWN ON THE EROSION & SEDIMENT CONTROL PLAN (ES-01). STABILIZE ANY AREA DISTURBED BY THE INSTALLATION OF SEDIMENT CONTROL DEVICES IMMEDIATELY.			COUNTY
4. CONTACT CARROLL COUNTY SEDIMENT CONTROL INSPECTOR FOR APPROVAL OF SEDIMENT CONTROL DEVICES BEFORE PROCEEDING. CONTRACTOR TO FOLLOW ALL CONDITIONS SET FORTH BY CARROLL COUNTY SEDIMENT CONTROL INSPECTOR.			COUNTY
5. ONCE ALL SEDIMENT CONTROL DEVICES ARE IN PLACE AND WITH APPROVAL OF THE SEDIMENT CONTROL INSPECTOR, EXCAVATE AND INSTALL THE PROPOSED STORM DRAIN FROM PR-I-101 TO PR-EW-109 AND PR-I-104 TO PR-I-103. DEWATER TRENCHES USING PORTABLE SEDIMENT TANKS. ANY AREAS NOT DRAINING TO APPROVED SEDIMENT CONTROL DEVICES SHALL BE TREATED USING SAME DAY STABILIZATION. IF PRECEDING THE STREAM RESTORATION PROJECT, INSTALL THE TEMPORARY CLASS I RIPRAP APRON AT PR-EW-109. PERFORM FINE GRADING AS SHOWN ON THE PLAN. PERMANENTLY STABILIZE AREAS WITH TURFGRASS SEED AND SOIL STABILIZATION MATTING.			COUNTY
6. WITH APPROVAL OF THE SEDIMENT CONTROL INSPECTOR, REMOVE SEDIMENT CONTROL DEVICES NOT NEEDED FOR PHASES 2 OR 3 CONSTRUCTION AND IMMEDIATELY STABILIZE THE AREA. ONCE STABILIZATION HAS BEEN ACHIEVED AND WITH APPROVAL OF THE SEDIMENT CONTROL INSPECTOR AND OWNER, PROCEED TO PHASE 2.			COUNTY

PHASE 2 (PR-I-209 TO PR-I-106, PR-I-301 TO PR-MH-303, & PR-I-304 TO PR-MH-305)	CERTIFYING PROFESSIONALS		
	INITIALS	DATE	INSPECTING AGENT
1. CLEAR AND GRUB FOR AND INSTALL THE TEMPORARY ORANGE CONSTRUCTION FENCING AND PORTABLE SEDIMENT TANK(S) AS NECESSARY TO PERFORM PHASE 2 WORK AND AS SHOWN ON THE EROSION & SEDIMENT CONTROL PLANS (ES-01 TO ES-02). STABILIZE ANY AREA DISTURBED BY THE INSTALLATION OF SEDIMENT CONTROL DEVICES IMMEDIATELY.			COUNTY
2. ONCE ALL SEDIMENT CONTROL DEVICES ARE IN PLACE AND WITH APPROVAL OF THE SEDIMENT CONTROL INSPECTOR, EXCAVATE AND INSTALL THE PROPOSED STORM DRAIN FROM PR-I-209 TO PR-I-106, PR-I-301 TO PR-MH-303, AND PR-I-304 TO PR-MH-305. DEWATER TRENCHES USING PORTABLE SEDIMENT TANKS. ANY AREAS NOT DRAINING TO APPROVED SEDIMENT CONTROL DEVICES SHALL BE TREATED USING SAME DAY STABILIZATION. DO NOT INSTALL STRUCTURE PR-I-209; TEMPORARILY BLOCK THE PIPE UNTIL PHASE 3. INSTALL THE PROPOSED DIKE/SWALE AT PR-I-301 AND PERFORM FINE GRADING AS SHOWN ON THE PLAN. PERMANENTLY STABILIZE AREAS WITH TURFGRASS SEED AND SOIL STABILIZATION MATTING.			COUNTY
3. WITH APPROVAL OF THE SEDIMENT CONTROL INSPECTOR, REMOVE SEDIMENT CONTROL DEVICES NOT NEEDED FOR PHASE 3 CONSTRUCTION AND IMMEDIATELY STABILIZE THE AREA. ONCE STABILIZATION HAS BEEN ACHIEVED AND WITH APPROVAL OF THE SEDIMENT CONTROL INSPECTOR AND OWNER, PROCEED TO PHASE 3.			COUNTY

PHASE 3 (PR-I-205 TO PR-EW-210)	CERTIFYING PROFESSIONALS		
	INITIALS	DATE	INSPECTING AGENT
1. CLEAR AND GRUB FOR AND INSTALL THE TEMPORARY ORANGE CONSTRUCTION FENCING, STABILIZED CONSTRUCTION ENTRANCES, SANDBAG DIKE, PORTABLE SEDIMENT TANK(S), AND SUPER SILT FENCE AS NECESSARY TO PERFORM PHASE 3 WORK AND AS SHOWN ON THE EROSION & SEDIMENT CONTROL PLAN (ES-02). STABILIZE ANY AREA DISTURBED BY THE INSTALLATION OF SEDIMENT CONTROL DEVICES IMMEDIATELY.			COUNTY
2. ONCE ALL SEDIMENT CONTROL DEVICES ARE IN PLACE AND WITH APPROVAL OF THE SEDIMENT CONTROL INSPECTOR, EXCAVATE AND INSTALL THE PROPOSED STORM DRAIN FROM PR-I-205 TO PR-EW-210. DEWATER TRENCHES USING PORTABLE SEDIMENT TANKS. ANY AREAS NOT DRAINING TO APPROVED SEDIMENT CONTROL DEVICES SHALL BE TREATED USING SAME DAY STABILIZATION. INSTALL THE PROPOSED DIVERSION STRUCTURE AT PR-I-209 AND MAKE THE CONNECTION TO THE PHASE 2 PIPE. INSTALL THE PROPOSED CLASS I RIPRAP APRON AT PR-EW-210. PERFORM FINE GRADING AS SHOWN ON THE PLAN. PERMANENTLY STABILIZE AREAS WITH TURFGRASS SEED AND SOIL STABILIZATION MATTING.			COUNTY
3. COMPLETE PERMANENT STABILIZATION OF ANY REMAINING AREAS WITHIN THE PROJECT AREA. COMPLETE IN-KIND RESTORATION OF ANY DAMAGE TO EXISTING INFRASTRUCTURE. (THIS INCLUDES BUT IS NOT LIMITED TO SIDEWALK, CURB AND GUTTER, PAVEMENT, UTILITY APPURTENANCES, TREES, SIGNS, ETC.)			COUNTY
4. ONCE PERMANENT STABILIZATION HAS BEEN ACHIEVED AND WITH APPROVAL OF THE SEDIMENT CONTROL INSPECTOR AND OWNER, REMOVE ALL REMAINING SEDIMENT CONTROL DEVICES. IMMEDIATELY STABILIZE ANY AREAS DISTURBED DURING THEIR REMOVAL.			COUNTY

OWNER / DEVELOPER:

CARROLL COUNTY
DEPARTMENT OF LAND AND RESOURCE MANAGEMENT
BUREAU OF RESOURCE MANAGEMENT
225 N. CENTER ST
WESTMINSTER, MARYLAND 21157-5194
PHONE: 410.386.2668

LAND OWNERS:

RICHARD J. & MARY L. GULAS
5812 MIRIAM DRIVE - LOT 39
PARCEL: 0575 TAX MAP: 0073 GRID: 0004

JOHN S. & DEBORAH A. BOEHL
5814 MIRIAM DRIVE - LOT 40
PARCEL: 0576 TAX MAP: 0073 GRID: 0004

LYNN E. GRAHAM
5807 MIRIAM DRIVE - LOT 58
PARCEL: 0576 TAX MAP: 0073 GRID: 0004

ELAINE M. ROSS
5811 MIRIAM DRIVE - LOT 57
PARCEL: 0575 TAX MAP: 0073 GRID: 0004

MARY M. & KATHLEEN W. REYNOLDS
5830 MIRIAM DRIVE - LOT "PARCEL I"
PARCEL: 0575 TAX MAP: 0073 GRID: 0004

JEFFREY D. CREUTZER & KAREN M. HILNBRAND
1107 COURTLAND DRIVE - LOT 18A
PARCEL: 0575 TAX MAP: 0073 GRID: 0004

JOSEPH W. & LISA V. THORPE
1105 COURTLAND DRIVE - LOT 19A
PARCEL: 0575 TAX MAP: 0073 GRID: 0004

TIMOTHY & BRITTANY BECK
1103 COURTLAND DRIVE - LOT 20A
PARCEL: 0575 TAX MAP: 0073 GRID: 0004

WAYNE & LORI HOWES
1104 JOHNSVILLE ROAD - LOT 2A
PARCEL: 0575 TAX MAP: 0073 GRID: 0004

MARK L. & JILL E. MARCIANTE
1102 JOHNSVILLE ROAD - LOT 1A
PARCEL: 0575 TAX MAP: 0073 GRID: 0004

REVISIONS		
NO.	DATE	DESCRIPTION

CENTURY ENGINEERING
CONSULTING ENGINEERS - PLANNERS
10710 GILROY ROAD
HUNT VALLEY, MARYLAND 21031
PHONE: (443) 589-2400 FAX: (443) 589-2401

CARROLL COUNTY BRYNWOOD STORM DRAIN IMPROVEMENTS

FINAL DESIGN

TITLE:

EROSION & SEDIMENT CONTROL NOTES

COUNTY FILE NO: GRO-20-0009	SCALE: N.T.S.	DATE: 1/13/2023
SEAL:	DESIGN: AW	CHECK: TT
	DWG NO: EN-01 OF EN-01	
	SHEET NO: 16 OF 17	

STATE OF MARYLAND · THOMAS G. TURNER · NO. 16997 · REGISTERED PROFESSIONAL ENGINEER

I HEREBY CERTIFY THAT THESE DOCUMENTS WERE PREPARED OR APPROVED BY ME, AND THAT I AM A DULY LICENSED PROFESSIONAL ENGINEER UNDER THE LAWS OF THE STATE OF MARYLAND.

LICENSE #: 16997 EXPIRES: 7/19/2024

T:\2020\TRANSPORTATION\191186 10 CARROLL CO BRYNWOOD STORM DRAIN IMPROVEMENTS\ACAD\PLAN\06 DRAINAGE\CD\EN01.DWG

TEMPORARY TRAFFIC CONTROL GENERAL NOTES:

1. IT IS THE RESPONSIBILITY OF THE CONTRACTOR PERFORMING THE WORK ON OR ADJACENT TO A PUBLIC ROAD TO PROVIDE, INSTALL AND MAINTAIN APPROPRIATE TRAFFIC CONTROL DEVICES IN ACCORDANCE WITH THE LATEST EDITION OF THE MARYLAND MANUAL ON UNIFORM TRAFFIC CONTROL DEVICES (MD MUTCD) FOR THE TRAVELING PUBLIC, PEDESTRIANS, BICYCLISTS, ROAD WORKERS, ETC. AT ALL TIMES.
2. THE CONTRACTOR SHALL NOTIFY THE DEPARTMENT OF PUBLIC WORKS (DPW) CONSTRUCTION INSPECTION DIVISION AT 410-386-2157 THREE (3) WORKING DAYS IN ADVANCE OF ANY CONSTRUCTION ON OR ADJACENT TO A COUNTY ROAD, INCLUDING INSTALLATION OF TRAFFIC CONTROL DEVICES. IF DPW CONSTRUCTION INSPECTION DIVISION IS NOT NOTIFIED THEY CAN STOP ALL WORK UNTIL THEY ARE COMFORTABLE IT IS SAFE FOR THE CONTRACTOR TO PROCEED.
3. ALL STANDARD REGULATORY AND WARNING SIGNS, BARRICADES AND OTHER TRAFFIC CONTROL DEVICES SHALL BE IN ACCORDANCE WITH THE LATEST EDITION OF THE MD MUTCD, MARYLAND STATE HIGHWAY ADMINISTRATION STANDARD SPECIFICATIONS FOR CONSTRUCTION AND MATERIALS, THE NCHRP 350 AND APPROVED BY THE DPW CONSTRUCTION INSPECTION DIVISION.
4. THE CONTRACTOR SHALL FOLLOW THE LATEST STANDARDS IN ACCORDANCE WITH THE MDSHA BOOK OF STANDARD FOR HIGHWAYS INCIDENTAL STRUCTURES AND THE APPROVED MARYLAND STATE HIGHWAY ADMINISTRATION PRODUCTS LIST. THE STANDARDS CAN BE FOUND AT WWW.ROADS.MARYLAND.GOV / BOOK OF STANDARDS - FOR HIGHWAY AND INCIDENTAL STRUCTURES / CATEGORY 1 - PRELIMINARY.
5. WORK SHALL NOT BE PERFORMED UNTIL ALL APPLICABLE TRAFFIC CONTROL DEVICES ARE IN PLACE. TRAFFIC CONTROL DEVICES MUST BE IN PLACE ANY TIME WORK IN OR ADJACENT TO A PUBLIC ROAD IS IN PROGRESS.
6. TRAFFIC CONTROL DEVICES SHALL BE REMOVED WHEN WORK IS NOT IN PROGRESS. IF APPROVED BY THE DPW CONSTRUCTION INSPECTION DIVISION SIGNS MAY BE COVERED SO THAT THE MESSAGE IS NOT VISIBLE TO DRIVERS.
7. LOCATIONS OF DEVICES MAY BE MODIFIED AS DIRECTED BY THE DPW CONSTRUCTION INSPECTION DIVISION TO ACCOMMODATE FIELD CONDITIONS.
8. THE CONTRACTOR SHALL BE RESPONSIBLE FOR MAINTAINING ALL TRAFFIC CONTROL DEVICES AND IMMEDIATELY REPLACE ANY WHICH ARE MISSING OR DETERMINED BY THE DPW CONSTRUCTION INSPECTION DIVISION TO BE UNSUITABLE FOR USE.
9. ALL SIGNS THAT ARE TO BE PART OF A WORK ZONE FOR MORE THAN THREE (3) DAYS SHALL BE PLACED ON POSTS.
10. COLLECTOR OR HIGHER CLASSIFICATION COUNTY ROADWAYS WORK HOURS ARE 9:00 AM AND 3:00 PM MONDAY THROUGH FRIDAY, UNLESS APPROVED OTHERWISE BY DPW.
11. ACCESS TO DRIVEWAYS SHALL BE MAINTAINED AT ALL TIMES UNLESS OTHER ARRANGEMENTS ARE MADE.
12. CHANNELIZING DEVICES SHALL BE EXTENDED TO A POINT WHERE THEY ARE VISIBLE TO APPROACHING TRAFFIC. A FULL LENGTH TAPER SHALL ALWAYS BE PROVIDED IN ADVANCE OF CURVES.
13. IF FLAGGERS ARE NOT ABLE TO SEE EACH OTHER TWO-WAY RADIO COMMUNICATIONS SHALL BE USED.
14. WARNING SIGNS SHALL BE MOUNTED IN ACCORDANCE WITH SHA STANDARD NO. MD 104.01-17A THROUGH D OR AS DIRECTED BY DPW.
15. WHEN PAVEMENT DROP OFFS ARE PRESENT THE CONTRACTOR SHALL PLACE TEMPORARY TRAFFIC CONTROL DEVICES, INCLUDING SIGNS, CHANNELIZING DEVICES AND BARRIERS, AS WELL AS SLOPE FILLET WEDGES IN ACCORDANCE WITH SHA STANDARD NO. MD 104.06-15 THROUGH 104.06-19. THE ENGINEER MAY RECOMMEND ALTERNATIVE METHODS TO PROTECT THE PAVEMENT EDGE; CONSIDERING FACTORS SUCH AS PEDESTRIANS, BICYCLES, TRAFFIC VOLUMES, VEHICLE SPEEDS, SIZE OF THE WORK ZONE, DURATION OF WORK, ETC.
16. PORTABLE VARIABLE MESSAGE SIGNS MAY BE REQUIRED BY DPW CONSTRUCTION INSPECTION DIVISION'S DISCRETION.
17. ANY CORRECTIONS, MODIFICATIONS OR ADDITIONS TO THIS PLAN MUST BE APPROVED BY THE BUREAU OF DEVELOPMENT REVIEW, ENGINEERING REVIEW, THROUGH THE RED-LINE REVISION PROCESS.

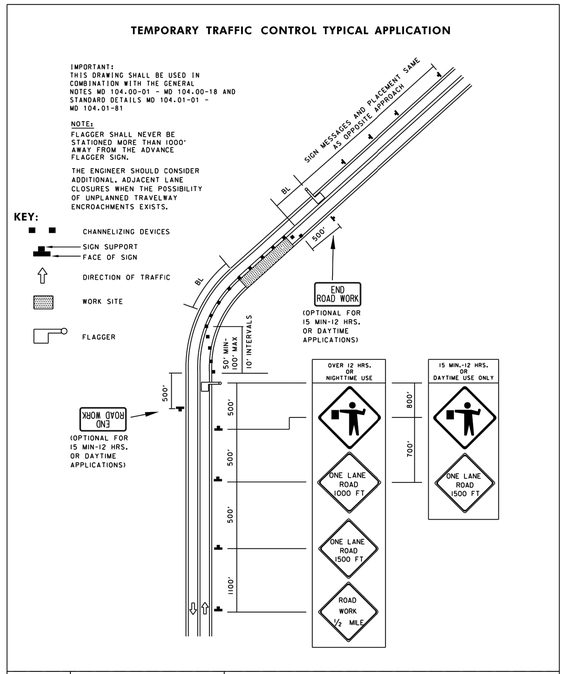

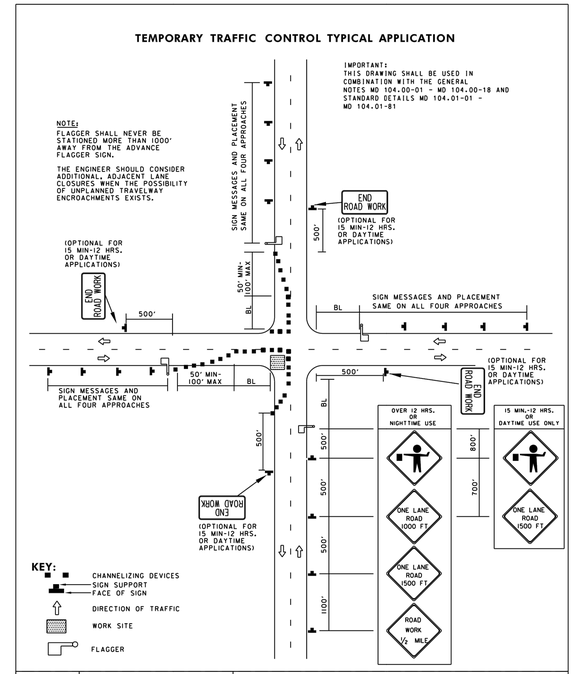

NOTES:

1. MAINTENANCE OF TRAFFIC (MOT) ON MIRIAM DRIVE AND COURTLAND DRIVE SHALL BE PROVIDED IN ACCORDANCE WITH STANDARDS MD 104.02-10 AND MD 104.02-14 (SEE STANDARD DETAILS THIS SHEET). ONE LANE OF TRAFFIC MUST BE MAINTAINED AT ALL TIMES.
2. WITH THE APPROVAL OF THE COUNTY, THE CONTRACTOR MAY PROPOSE AN ALTERNATIVE MOT APPROACH, INCLUDING BUT NOT LIMITED TO DAYTIME DETOUR DURING WORK HOURS.
3. TRENCHES SHALL BE PROTECTED AT THE END OF EACH DAY USING STEEL PLATES, TEMPORARY PAVEMENT PATCH, OR OTHER METHOD APPROVED BY THE COUNTY. PAYMENT FOR STEEL PLATES AND/OR TEMPORARY PAVEMENT PATCH SHALL BE INCIDENTAL TO THE LUMP SUM ITEM FOR MAINTENANCE OF TRAFFIC.

OWNER / DEVELOPER:

CARROLL COUNTY
DEPARTMENT OF LAND AND RESOURCE MANAGEMENT
BUREAU OF RESOURCE MANAGEMENT
225 N. CENTER ST
WESTMINSTER, MARYLAND 21157-5194
PHONE: 410.386.2668

LAND OWNERS:

RICHARD J. & MARY L. GULAS
5812 MIRIAM DRIVE - LOT 39
PARCEL: 0575 TAX MAP: 0073 GRID: 0004

JOHN S. & DEBORAH A. BOEHL
5814 MIRIAM DRIVE - LOT 40
PARCEL: 0576 TAX MAP: 0073 GRID: 0004

LYNN E. GRAHAM
5807 MIRIAM DRIVE - LOT 58
PARCEL: 0576 TAX MAP: 0073 GRID: 0004

ELAINE M. ROSS
5811 MIRIAM DRIVE - LOT 57
PARCEL: 0575 TAX MAP: 0073 GRID: 0004

MARY M. & KATHLEEN W. REYNOLDS
5830 MIRIAM DRIVE - LOT "PARCEL I"
PARCEL: 0575 TAX MAP: 0073 GRID: 0004

JEFFREY D. CREUTZER & KAREN M. HILNBRAND
1107 COURTLAND DRIVE - LOT 18A
PARCEL: 0575 TAX MAP: 0073 GRID: 0004

JOSEPH W. & LISA V. THORPE
1105 COURTLAND DRIVE - LOT 19A
PARCEL: 0575 TAX MAP: 0073 GRID: 0004

TIMOTHY & BRITTANY BECK
1103 COURTLAND DRIVE - LOT 20A
PARCEL: 0575 TAX MAP: 0073 GRID: 0004

WAYNE & LORI HOWES
1104 JOHNSVILLE ROAD - LOT 2A
PARCEL: 0575 TAX MAP: 0073 GRID: 0004

MARK L. & JILL E. MARCIANTE
1102 JOHNSVILLE ROAD - LOT 1A
PARCEL: 0575 TAX MAP: 0073 GRID: 0004

REVISIONS		
NO.	DATE	DESCRIPTION

CENTURY ENGINEERING
CONSULTING ENGINEERS - PLANNERS
10710 GILROY ROAD
HUNT VALLEY, MARYLAND 21031
PHONE: (443) 589-2400 FAX: (443) 589-2401

CARROLL COUNTY BRYNWOOD STORM DRAIN IMPROVEMENTS

FINAL DESIGN

TITLE:

TEMPORARY TRAFFIC CONTROL PLAN

COUNTY FILE NO:	SCALE:	DATE:
GRO-20-0009	N.T.S.	1/13/2023
SEAL:	DESIGN: AW	CHECK: TT
	DWG NO: MT-01 OF MT-01	
	SHEET NO: 17 OF 17	

STATE OF MARYLAND — THOMAS G. TURNER — No. 16997 — REGISTERED PROFESSIONAL ENGINEER

I HEREBY CERTIFY THAT THESE DOCUMENTS WERE PREPARED OR APPROVED BY ME, AND THAT I AM A DULY LICENSED PROFESSIONAL ENGINEER UNDER THE LAWS OF THE STATE OF MARYLAND.

LICENSE #: 16997 EXPIRES: 7/15/2024

T:\2020\TRANSPORTATION\71195.10 CARROLL CO BRYNWOOD STORM DRAIN IMPROVEMENTS\CADD\PRT\MD00_BRYNWOOD.DWG